MOTOR STARTERS NOW AVAILABLE

SHW/SVW Series

Hydronic

Air Handling Units

First Co. commercial - duty **SHW/SVW** chilled or hot water blower coil units are designed for installation within the conditioned area or as remote units with duct systems. Standard 4 row coils can be used for cooling or heating. These air handlers are compact, with large removable panels for installation and ease of service. Separate filter panels are provided on both sides of unit. Optional accessories include 6 row cooling coils, hot water coils, various motor options, mixing boxes, motor starters, and discharge plenums. **All models feature positive slope drain pans.** Standard models are available in 8 popular sizes - 800 through 8000 nominal CFM (2 through 20 tons). All standard models are ETL listed and rated in accordance with ARI Standard 430 (see listing on page 4).

2 THROUGH 20 TONS

(HORIZONTAL & VERTICAL)

2 - 5 TON HORIZONTAL
(24SHW - 60SHW)

7-1/2 - 20 TON HORIZONTAL
(90SHW - 240SHW)

2 - 20 TON VERTICAL
(24SVW - 240SVW)

FIRST CO. - P.O. Box 270969 - Dallas, Texas 75227 - Ph. (214) 388-5751 - Fax (214) 388-2255 - www.firstco.com

TABLE OF CONTENTS

DESCRIPTION	PAGE
INFORMATION REQUIRED FOR UNIT SELECTION	2
COMPONENT STATIC RESISTANCE	3
STANDARD FEATURES / OPTIONS	4,5
MODEL NUMBERING SYSTEM	4
UNIT SELECTION PROCEDURE	6,7
PHYSICAL DATA	
SHW	8,9
SVW	10,11
FAN PERFORMANCE	12,13
COOLING AND HEATING CAPACITIES:	
24SHW / 24SVW	14
36SHW / 36SVW	15
48SHW / 48SVW	16
60SHW / 60SVW	17
90SHW / 90SVW	18
120SHW / 120SVW	19
180SHW / 180SVW	20
240SHW / 240SVW	21
HOT WATER HEATING CORRECTION FACTORS	22
GUIDE SPECIFICATIONS	22

INFORMATION REQUIRED FOR UNIT SELECTION

System Type (circle one) : 2 - pipe (1 coil) or 4 - pipe (sep. htg. & clg. coils)

CFM _ _ _ _ _ _ _ _ _ E.S.P. _ _ _ _ _ _ MOTOR: HP:_ _ _ _ VOLTAGE:_ _ _ _ PHASE:_ _ _ _

COOLING: INDOOR: DB _ _ _ _ WB _ _ _ _ OUTDOOR: DB _ _ _ _

TOTAL BTUH _ _ _ _ _ SENS. BTUH _ _ _ _ _ _ GPM _ _ _ _ EWT _ _ _ _

HEATING: TOTAL BTUH _ _ _ _ _ _ GPM _ _ _ _ EWT _ _ _ _ EAT _ _ _ _

MISC: _ _ _ _ _ _ _ _ _

COMPONENT STATIC RESISTANCE

MODEL	NOMINAL CFM	COMPONENT STATIC RESISTANCE (INCHES OF WATER)				
		CABINET	COOLING COIL*		HEATING COIL	FILTER
			4 ROW	6 ROW	2 ROW	
24SHW / 24SVW	600	0.09	0.14	0.22	0.07	0.04
	700	0.10	0.18	0.27	0.09	0.05
	800	0.11	0.23	0.34	0.12	0.06
	900	0.12	0.28	0.42	0.14	0.07
	1000	0.13	0.33	0.50	0.18	0.08
36SHW / 36SVW	1000	0.09	0.17	0.25	0.08	0.04
	1100	0.10	0.19	0.28	0.10	0.05
	1200	0.11	0.23	0.34	0.12	0.06
	1300	0.12	0.26	0.39	0.13	0.07
	1400	0.13	0.30	0.45	0.15	0.08
48SHW / 48SVW	1400	0.09	0.18	0.27	0.09	0.05
	1500	0.10	0.20	0.31	0.10	0.06
	1600	0.11	0.23	0.34	0.11	0.06
	1700	0.12	0.25	0.38	0.12	0.07
	1800	0.13	0.28	0.42	0.13	0.08
60SHW / 60SVW	1800	0.10	0.20	0.28	0.09	0.05
	1900	0.11	0.21	0.31	0.10	0.06
	2000	0.12	0.23	0.34	0.11	0.06
	2100	0.13	0.25	0.37	0.12	0.07
	2200	0.15	0.28	0.40	0.13	0.08

MODEL	NOMINAL CFM	COMPONENT STATIC RESISTANCE (INCHES OF WATER)				
		CABINET	COOLING COIL*		HEATING COIL	FILTER
			4 ROW	6 ROW	2 ROW	
90SHW / 90SVW	2500	0.12	0.26	0.39	0.13	0.04
	2750	0.14	0.30	0.45	0.16	0.05
	3000	0.16	0.34	0.51	0.18	0.06
	3250	0.17	0.39	0.58	0.21	0.07
	3500	0.19	0.44	0.65	0.24	0.08
120SHW / 120SVW	3400	0.14	0.29	0.43	0.14	0.05
	3700	0.15	0.33	0.48	0.16	0.06
	4000	0.17	0.37	0.54	0.19	0.07
	4300	0.19	0.41	0.61	0.21	0.08
	4600	0.21	0.45	0.67	0.24	0.09
180SHW / 180SVW	5200	0.16	0.30	0.44	0.14	0.05
	5600	0.17	033	0.49	0.16	0.06
	6000	0.19	0.37	0.55	0.18	0.07
	6400	0.21	0.41	0.61	0.20	0.08
	6800	0.23	0.45	0.66	0.23	0.09
240SHW / 240SVW	6000	0.11	0.21	0.31	0.10	0.04
	7000	0.16	0.30	0.44	0.14	0.05
	8000	0.19	0.37	0.55	0.18	0.07
	9000	0.23	0.45	0.66	0.23	0.09
	10000	0.29	0.58	0.86	0.28	0.11

*** Wet Coil (Dry Coil P.D. = Wet P.D. x .70)**

Standard Features

CABINET -
Fabricated of heavy gauge galvanized steel. Seismic resistant mounting brackets are standard on 2-5 ton models.

BLOWER -
Resiliently mounted, heavy duty, double inlet, forward curved blade, centrifugal type. Each wheel is dynamically balanced for smooth, quiet operation. All blowers are belt driven with field adjustable pulleys to permit variations in static pressure and air requirements. All blowers have ball bearings.

COILS -
Fabricated of 3/8" or 1/2" OD seamless copper tubes mechanically expanded to highly efficient aluminum fins to maximize heat transfer. All coils have manual air vents. All models have positive slope drain pans.

INSULATION -
The entire interior of the cabinet is insulated with one (1) inch insulation.

FILTER -
One inch throw away filters are provided as standard in all **2 - 5 ton** units. One inch permanent filters are provided as standard in all **7-1/2 - 20 ton** units. **Filters can be changed without tools.** Space available for 2".

FACTORY WIRED -
All standard motors are field or factory installed and wired at voltage specified by customer. (If not specified, multi-voltage motors will be wired at highest voltage)

MOTOR -
Standard motor is 1725 RPM. The adjustable motor mount permits easy belt adjustment. A variable pitch pulley allows balancing of the system to the desired CFM. Standard motors have internal overload protection. Therefore, units shipped with standard motors will be ETL listed. Most non-standard motors (i.e. 575V, 2-speed, TEFC, some 50 Hz., etc.) are not available with internal overload protection. Therefore, most units shipped with non-standard motors can be ETL listed with the addition of a factory installed motor starter (contact the factory for starter information and ETL verification.)

MISCELLANEOUS -
- Slotted mounting rails for easy installation (**2 -5 ton SHW** only). Rails are turned down 1/2" on each end for safer and easier installation.
- 4 x 4 junction box accepts a field installed (24/120V) relay / transformer for low voltage control.
- 3/4 inch NPT drain connections on both sides of cabinet.
- Header connections on the right side as standard. Knockouts are provided for conversion to the left side. (Looking with air flow).
- Drain pans are coated for corrosion protection.

Options (contact the factory)

1. **6 row cooling coil** instead of standard 4 row coil (factory installed only).
2. **Stainless steel** drain pan.
3. **Motor starters.**
4. H**ot water coil** can be field or factory installed in either the reheat or pre-heat position (reheat is standard).

PART NUMBER	FOR UNIT MODEL	MANIFOLD CONNECTIONS
24HWK	24SHW/SVW	7/8" OD
36HWK	36SHW/SVW	
48HWK	48SHW/SVW	
60HWK	60SHW/SVW	
90HWK	90SHW/SVW	1-1/8" OD
120HWK	120SHW/SVW	1-3/8" OD
180HWK	180SHW/SVW	
240HWK	240SHW/SVW	

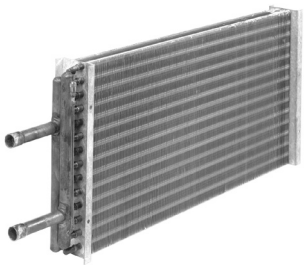

5. **Discharge plenum** with four way double - deflection grille (field installed) (for SHW units only)

PART NUMBER	FOR UNIT MODEL	DEPTH (1)
24DP	24SHW	6"
36DP	36SHW	
48DP	48SHW	
60DP	60SHW	
90DP	90SHW	
120DP	120SHW	
180DP	180SHW	
240DP	240SHW	

(1) Height and width are the same as the unit being attached to.

6. **Relay / Transformer** mounts directly on 4 x 4 junstion box on each unit.
   Part number is **310-E301** (24/120V), **310-E302** (24.208-230V) and **310-E303** (24/277V) - (for 2-5 ton models only)

Options (Cont.)

Mixing Boxes

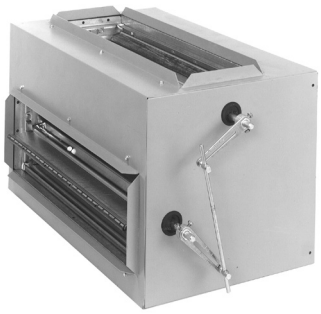

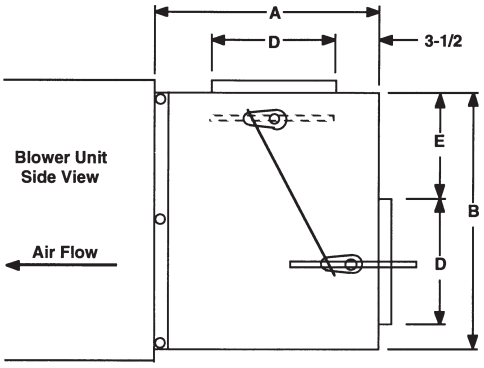

Mixing Box
Side View

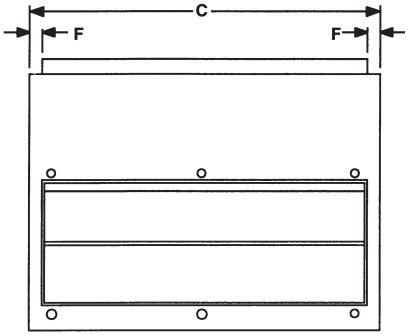

Mixing Box
Rear View

Dimensions:

MODEL	FOR UNIT MODEL	A	B	C	D	E	F	DAMPER SIZE (NOM)	SHIPPING WEIGHT
24MB	24SH, SV	16	16-3/8	18-1/8	8	6	1-1/16	2-16 x 8	40
36MB	36SH, SV	16	16-3/8	27-5/8	8	6	1-1/16	2-26 x 8	58
48MB	48SH, SV	18	20-3/8	29-1/8	10	8	1-1/16	2-27 x 10	65
60MB	60SH, SV	18	20-3/8	36-1/8	10	8	1-1/16	2-34 x 10	78
90MB	90SH, SV	18	25-3/8	45-1/8	10	8	1-1/16	2-42 x 10	110
120MB	120SH, SV	20	30-3/8	48-1/8	12	10	1-1/16	2-46 x 12	135
180MB	180SH, SV	22	37-7/8	57-1/8	14	12	1-9/16	2-54 x 14	190
240MB	240SH, SV	22	50-1/2	57-1/8	14	24	1-9/16	2-54 x 14	210

Features:

1. Cabinet fully insulated - 3/4 inch.
2. Embossed galvanized cabinet on 24-240MB.
3. Crank arms and linkage rod for damper connection are furnished. Connections can be made on either side of mixing boxes. The balance of necessary linkage hardware, damper motor, and controls to be field supplied.
4. Dampers can be positioned for either rear/top or rear/bottom locations.
5. 1” duct flanges provided on damper openings.
6. Dampers have air seals on the edges for positive closing. 24-90MB have single horizontal damper blades. 120-240MB have double horizontal damper blades.
7. When used with water coil units, a “freezestat” must be installed to prevent coil damage caused by low ambient conditions.

UNIT SELECTION PROCEDURE

1. Complete as much of the "INFORMATION REQUIRED FOR UNIT SELECTION" on page 2 as possible.

Example:

INFORMATION REQUIRED FOR UNIT SELECTION

System Type (circle one) : 2 - pipe (1 coil) or 4 - pipe (sep. htg. & clg. coils)

CFM ___**3900**___ E.S.P. __**.80**___ MOTOR: HP:_____VOLTAGE:____**230**____PHASE:___**3**___

COOLING: INDOOR: DB _____ WB _____OUTDOOR: DB_____

TOTAL BTUH____**158,000**___SENS. BTUH _____ GPM _____EWT ___**45**____

HEATING: TOTAL BTUH _____GPM_____EWT_____EAT_____

MISC: _____

2. Select the unit model that meets the required total MBH cooling and heating at the required conditions from tables on pages 16 – 23 (capacities and air are the same for SHW and SVW models).

Example: Required clg. capacity = 158,000 BTUH clg. @ 45 degree EWT

Unit selected = 120SHW6

3. Refer to page 7 for the balance of the selection procedure: If the required CFM falls within the range for the selected model, proceed to number 4. If not, use the First Co. Computer Selection Program or contact the factory for assistance.

4. Determine the required motor horsepower by matching the selected model (i.e. 120SHW6) with the closest CFM at the required External Static Pressure (ESP). Note the horsepower (HP) at the top of the CFM range that is needed.

Example: Required CFM is 3900 at .80 ESP.

HP required = 2 HP

5. Select the motor voltage, phase, and horsepower and then the appropriate Motor Drive Assembly Number that applies.

Example: Above example requires Motor Drive Assembly Number **984120-G3**

MODEL NUMBERING SYSTEM

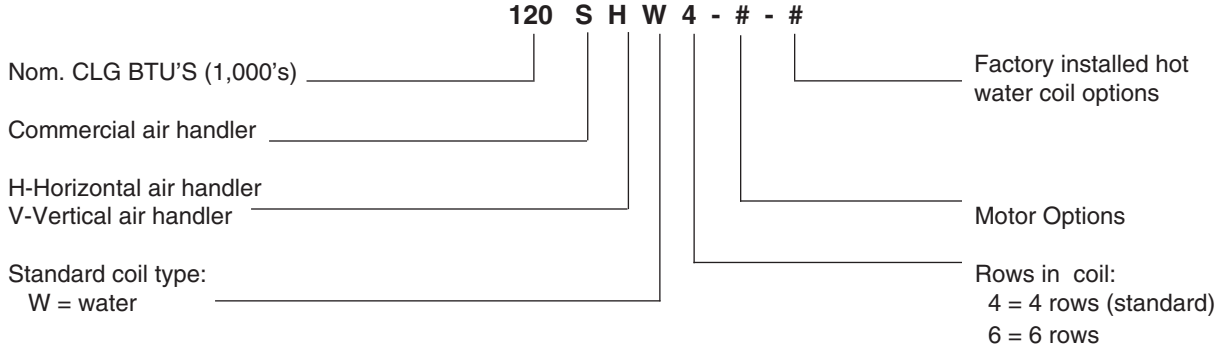

SHW / SVW MOTOR DRIVE ASSEMBLY SELECTION CHART

Model CFM	Available External Static Range					Total Static In.
	2 Row Coil	4 Row Coil	4R/2R Coil	6 Row Coil	6R/2R Coil	
24S(*)W	**24S(*)W2**	**24S(*)W4**	**24S(*)W42**	**24S(*)W6**	**24S(*)W62**	
- 1/4 HP -						
700	0.13 - 0.80	0.04 - 0.71	0.00 - 0.62	0.00 - 0.61	0.00 - 0.53	0.37 - 1.04
800	0.00 - 0.63	0.00 - 0.52	0.00 - 0.41	0.00 - 0.41	0.00 - 0.29	0.33 - 0.92
900	0.00 - 0.44	0.00 - 0.30	0.00 - 0.16	0.00 - 0.16	0.00 - 0.02	0.28 - 0.77
- 1/3 HP -						
700	0.36 - 1.23	0.27 - 1.14	0.18 - 1.05	0.17 - 1.04	0.09 - 0.96	0.60 - 1.47
800	0.29 - 1.03	0.18 - 0.92	0.07 - 0.81	0.07 - 0.81	0.00 - 0.69	0.58 - 1.32
900	0.21 - 0.83	0.07 - 0.69	0.00 - 0.55	0.00 - 0.55	0.00 - 0.41	0.54 - 1.16
- 1/2 HP -						
700	0.64 -1.62	0.55 - 1.53	0.46 - 1.44	0.45 - 1.43	0.37 - 1.35	0.88 - 1.86
800	0.59 -1.62	0.48 - 1.51	0.37 - 1.40	0.37 - 1.40	0.25 - 1.28	0.88 - 1.91
900	0.54 -1.52	0.40 - 1.38	0.26 - 1.24	0.26 - 1.24	0.12 - 1.10	0.87 - 1.85
- 3/4 HP -						
700	0.90 - 1.62	0.81 - 1.53	0.72 - 1.44	0.71 - 1.43	0.63 - 1.35	1.14 - 1.86
800	0.87 - 1.62	0.76 - 1.51	0.65 - 1.40	0.65 - 1.40	0.53 - 1.28	1.16 - 1.91
900	0.84 - 1.61	0.70 - 1.47	0.56 - 1.33	0.56 - 1.33	0.42 - 1.19	1.17 - 1.94
36S(*)W	**36S(*)W2**	**36S(*)W4**	**36S(*)W42**	**36S(*)W6**	**36S(*)W62**	
- 1/3 HP -						
1000	0.13 - 0.74	0.00 - 0.65	0.00 - 0.57	0.00 - 0.57	0.00 - 0.49	0.34 - 0.95
1100	0.07 - 0.61	0.00 - 0.52	0.00 - 0.42	0.00 - 0.43	0.00 - 0.33	0.32 - 0.86
1200	0.00 - 0.47	0.00 - 0.36	0.00 - 0.24	0.00 - 0.25	0.00 - 0.13	0.29 - 0.76
1300	0.00 - 0.34	0.00 - 0.21	0.00 - 0.08	0.00 - 0.08	0.00 - 0.00	0.26 - 0.66
- 1/2 HP -						
1000	0.34 - 1.34	0.25 - 1.25	0.17 - 1.17	0.17 - 1.17	0.09 - 1.09	0.55 - 1.55
1100	0.29 - 1.19	0.20 - 1.10	0.10 - 1.00	0.11 - 1.01	0.00 - 0.91	0.54 - 1.44
1200	0.24 - 1.04	0.13 - 0.93	0.00 - 0.81	0.00 - 0.82	0.00 - 0.70	0.53 - 1.33
1300	0.18 - 0.90	0.05 - 0.77	0.00 - 0.64	0.00 - 0.64	0.00 - 0.51	0.50 - 1.22
- 3/4 HP -						
1000	0.88 - 1.55	0.79 - 1.46	0.71 - 1.38	0.71 - 1.38	0.63 - 1.30	1.09 - 1.76
1100	0.86 - 1.55	0.77 - 1.46	0.67 - 1.36	0.68 - 1.37	0.58 - 1.27	1.11 - 1.80
1200	0.82 - 1.54	0.71 - 1.43	0.59 - 1.31	0.60 - 1.32	0.48 - 1.20	1.11 - 1.83
1300	0.78 - 1.51	0.65 - 1.38	0.52 - 1.25	0.52 - 1.25	0.39 - 1.12	1.10 - 1.83
48S(*)W	**48S(*)W2**	**48S(*)W4**	**48S(*)W42**	**48S(*)W6**	**48S(*)W62**	
- 1/2 HP -						
1500	0.17 - 0.75	0.07 - 0.65	0.00 - 0.55	0.00 - 0.54	0.00 - 0.44	0.43 - 1.01
1600	0.12 - 0.66	0.00 - 0.54	0.00 - 0.43	0.00 - 0.43	0.00 - 0.32	0.40 - 0.94
1700	0.06 - 0.55	0.00 - 0.42	0.00 - 0.30	0.00 - 0.29	0.00 - 0.17	0.37 - 0.86
- 3/4 HP -						
1500	0.46 - 1.37	0.36 - 1.27	0.26 - 1.17	0.25 - 1.16	0.15 - 1.06	0.72 - 1.63
1600	0.42 - 1.26	0.30 - 1.14	0.19 - 1.03	0.19 - 1.03	0.08 - 0.92	0.70 - 1.54
1700	0.37 - 1.15	0.24 - 1.02	0.12 - 0.90	0.11 - 0.89	0.00 - 0.77	0.68 - 1.46
- 1 HP -						
1500	0.88 - 1.63	0.78 - 1.53	0.68 - 1.43	0.67 - 1.42	0.57 - 1.32	1.14 - 1.89
1600	0.85 - 1.63	0.73 - 1.51	0.62 - 1.40	0.62 - 1.40	0.51 - 1.29	1.13 - 1.91
1700	0.81 - 1.61	0.68 - 1.48	0.56 - 1.36	0.55 - 1.35	0.43 - 1.23	1.12 - 1.92
60S(*)W	**60S(*)W2**	**60S(*)W4**	**60S(*)W42**	**60S(*)W6**	**60S(*)W62**	
- 1/2 HP -						
1900	0.15 - 0.59	0.00 - 0.48	0.00 - 0.38	0.00 - 0.38	0.00 - 0.28	0.42 - 0.86
2000	0.11 - 0.51	0.00 - 0.39	0.00 - 0.28	0.00 - 0.28	0.00 - 0.17	0.40 - 0.80
12100	0.06 - 0.42	0.00 - 0.29	0.00 - 0.17	0.00 - 0.17	0.00 - 0.05	0.38 - 0.74
- 3/4 HP -						
1900	0.44 - 1.16	0.33 - 1.05	0.23 - 0.95	0.23 - 0.95	0.13 - 0.85	0.71 - 1.43
2000	0.42 - 1.08	0.30 - 0.96	0.19 - 0.85	0.19 - 0.85	0.08 - 0.74	0.71 - 1.37
2100	0.38 - 0.99	0.25 - 0.86	0.13 - 0.74	0.13 - 0.74	0.00 - 0.62	0.70 - 1.31
- 1 HP -						
1900	0.77 - 1.57	0.66 - 1.46	0.56 - 1.36	0.56 - 1.36	0.46 - 1.26	1.04 - 1.84
2000	0.76 - 1.51	0.64 - 1.39	0.53 - 1.28	0.53 - 1.28	0.42 - 1.17	1.05 - 1.80
2100	0.74 - 1.43	0.61 - 1.30	0.49 - 1.18	0.49 - 1.18	0.37 - 1.06	1.06 - 1.75
- 1-1/2 HP -						
1900	1.10 - 1.91	0.99 - 1.80	0.89 - 1.70	0.89 - 1.70	0.79 - 1.60	1.37 - 2.18
2000	1.09 - 1.91	0.97 - 1.79	0.86 - 1.68	0.86 - 1.68	0.75 - 1.57	1.38 - 2.20
2100	1.07 - 1.90	0.94 - 1.77	0.82 - 1.65	0.82 - 1.65	0.70 - 1.53	1.39 - 2.22

***H = Horizontal, V = Vertical**

Model CFM	Available External Static Range					Total Static In.
	2 Row Coil	4 Row Coil	4R/2R Coil	6 Row Coil	6R/2R Coil	
90S(*)W	**90S(*)W2**	**90S(*)W4**	**90S(*)W42**	**90S(*)W6**	**90S(*)W62**	
- 3/4 HP -						
2800	0.00 - 0.73	0.00 - 0.58	0.00 - 0.42	0.00 - 0.43	0.00 - 0.27	0.34 - 1.09
3000	0.00 - 0.51	0.00 - 0.35	0.00 - 0.17	0.00 - 0.18	0.00 - 0.00	0.33 - 0.91
3200	0.00 - 0.30	0.00 - 0.13	0.00 - 0.00	0.00 - 0.00	0.00 - 0.00	0.31 - 0.74
- 1 HP -						
2800	0.38 - 1.17	0.23 - 1.02	0.07 - 0.86	0.08 - 0.87	0.00 - 0.71	0.74 - 1.53
3000	0.33 - 0.92	0.17 - 0.76	0.00 - 0.58	0.00 - 0.59	0.00 - 0.41	0.73 - 1.32
3200	0.27 - 0.70	0.10 - 0.53	0.00 - 0.32	0.00 - 0.34	0.00 - 0.14	0.71 - 1.14
- 1-1/2 HP -						
2800	0.63 -1.80	0.48 - 1.65	0.32 - 1.49	0.33 - 1.50	0.17 - 1.34	0.99 - 2.16
3000	0.59 -1.74	0.43 - 1.58	0.25 - 1.40	0.26 - 1.41	0.08 - 1.23	0.99 - 2.14
3200						
- 2 HP -						
2800	1.01 - 1.80	0.86 - 1.65	0.70 - 1.49	0.71 - 1.50	0.55 - 1.34	1.37 - 2.16
3000	0.97 - 0.75	0.81 - 1.63	0.63 - 1.45	0.64 - 1.46	0.46 - 1.28	1.37 - 2.19
3200	0.93 - 1.77	0.76 - 1.60	0.55 - 1.39	0.57 - 1.41	0.37 - 1.21	1.37 - 2.21
120S(*)W	**120S(*)W2**	**120S(*)W4**	**120S(*)W42**	**120S(*)W6**	**120S(*)W62**	
- 1-1/2 HP -						
3800	0.02 - 0.97	0.00 - 0.80	0.00 - 0.63	0.00 - 0.64	0.00 - 0.47	0.41 - 1.36
4000	0.00 - 0.75	0.00 - 0.57	0.00 - 0.38	0.00 - 0.40	0.00 - 0.21	0.37 - 1.18
4200	0.00 - 0.55	0.00 - 0.35	0.00 - 0.15	0.00 - 0.17	0.00 - 0.00	0.33 - 1.01
- 2 HP -						
3800	0.51 - 1.65	0.34 - 1.48	0.17 - 1.31	0.18 - 1.32	0.01 - 1.15	0.90 - 2.04
4000	0.43 - 1.42	0.25 - 1.24	0.06 - 1.05	0.08 - 1.07	0.00 - 0.88	0.86 - 1.85
4200	0.36 - 1.20	0.16 - 1.00	0.00 - 0.80	0.00 - 0.82	0.00 - 0.61	0.82 - 1.66
- 3 HP -						
3800						
4000	0.92 - 1.52	0.74 - 1.34	0.55 - 1.15	0.57 - 1.17	0.38 - 0.98	1.35 - 1.95
4200	0.85 - 1.47	0.65 - 1.27	0.45 - 1.07	0.47 - 1.09	0.28 - 0.88	1.31 - 1.93
180S(*)W	**180S(*)W2**	**180S(*)W4**	**180S(*)W42**	**180S(*)W6**	**180S(*)W62**	
- 2 HP -						
5800	0.24 - 0.92	0.06 - 0.74	0.00 - 0.57	0.00 - 0.57	0.00 - 0.40	0.66 - 1.34
6000	0.20 - 0.77	0.00 - 0.58	0.00 - 0.40	0.00 - 0.40	0.00 - 0.22	0.64 - 1.21
6200	0.16 - 0.63	0.00 - 0.43	0.00 - 0.24	0.00 - 0.24	0.00 - 0.05	0.62 - 1.09
- 3 HP -						
5800	0.50 - 1.62	0.32 - 1.44	0.15 - 1.27	0.15 - 1.27	0.00 - 1.10	0.92 - 2.04
6000	0.46 - 1.60	0.27 - 1.41	0.09 - 1.23	0.09 - 1.23	0.00 - 1.05	0.90 - 2.04
6200	0.42 - 1.47	0.22 - 1.27	0.03 - 1.08	0.00 - 1.08	0.00 - 0.89	0.88 - 1.93
240S(*)W	**240S(*)W2**	**240S(*)W4**	**240S(*)W42**	**240S(*)W6**	**240S(*)W62**	
- 3 HP -						
7500	0.08 - 0.79	0.00 - 0.61	0.00 - 0.45	0.00 - 0.45	0.00 - 0.31	0.47 - 1.18
8000	0.00 - 0.45	0.00 - 0.26	0.00 - 0.08	0.00 - 0.08	0.00 - 0.00	0.39 - 0.89
8500	0.00 - 0.13	0.00 - 0.00	0.00 - 0.00	0.00 - 0.00	0.00 - 0.00	0.29 - 0.62
- 5 HP -						
7500	0.20 - 1.79	0.00 - 1.61	0.00 - 1.45	0.00 - 1.45	0.00 - 1.31	0.59 - 2.18
8000	0.07 - 1.71	0.00 - 1.52	0.00 - 1.34	0.00 - 1.34	0.00 - 1.17	0.51 - 2.15
8500	0.00 - 1.39	0.00 - 1.18	0.00 - 0.98	0.00 - 0.99	0.00 - 0.79	0.42 - 1.88

***H = Horizontal, V = Vertical**

Physical Data - Models 24SHW - 60SHW

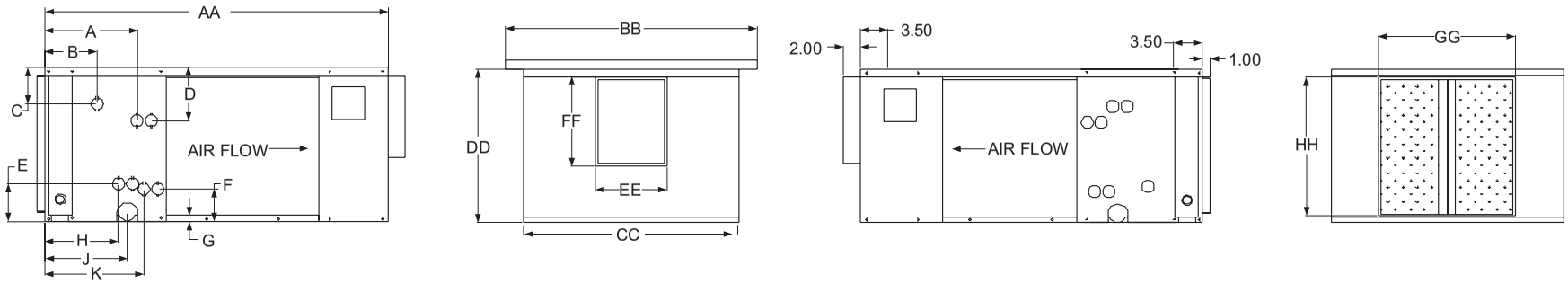

UNIT DIMENSIONS

MODEL	UNIT CABINET				BLOWER OUTLET		RETURN DUCT CONNECTION		STUBOUT LOCATION FOR WATER COILS									
	AA	BB	CC	DD	EE	FF	GG	HH	A	B	C	D	E	F	G	H	J	K
24SHW4	37	32-1/2	27	18-7/8	8-3/4	10-7/8	18	16-1/4	11-1/4	6-5/16	4-1/2	6-1/2	4-1/2	3-15/16	1	8-15/16	10	12
36SHW4	37	42	36-1/2	18-7/8	12-1/4	10-7/8	27-1/2	16-1/4	11-1/4	6-5/16	4-1/2	6-1/2	4-1/2	3-15/16	1	8-15/16	10	12
48SHW4	39	43-1/2	38	22-7/8	13-5/8	11-7/8	29	20-1/4	11-1/4	6-5/16	3-3/4	5-3/4	4-1/2	3-15/16	1	8-15/16	10	12
60SHW4	42	50-1/2	45	22-7/8	16	13-7/8	36	20-1/4	11-1/4	6-5/16	3-3/4	5-3/4	4-1/2	3-15/16	1	8-15/16	10	12
24SHW6	37	32-1/2	27	18-7/8	8-3/4	10-7/8	18	16-1/4	12-15/16	6-5/16	4-1/2	6-1/2	4-1/2	3-15/16	1	10-5/8	10	13-3/4
36SHW6	37	42	36-1/2	18-7/8	12-1/4	10-7/8	27-1/2	16-1/4	12-15/16	6-5/16	4-1/2	6-1/2	4-1/2	3-15/16	1	10-5/8	10	13-3/4
48SHW6	39	43-1/2	38	22-7/8	13-5/8	11-7/8	29	20-1/4	12-15/16	6-5/16	3-3/4	5-3/4	4-1/2	3-15/16	1	10-5/8	10	13-3/4
60SHW6	42	50-1/2	48	22-7/8	16	13-7/8	36	20-1/4	12-15/16	6-5/16	3-3/4	5-3/4	4-1/2	3-15/16	1	10-5/8	10	13-3/4

Notes: 1) All drain connections are 3/4" MPT and located on same side as coil connections.
2) All units have knockouts on both sides for either (standard) or left side coil stub outs. (Looking with airflow) All coil connections must be on the same side of the unit.

GENERAL SPECIFICATIONS

MODEL	NOM. COOL TONS	FACE AREA SQ. FT.	TUBE SIZE	STD. MOTOR HP	VOLTS	PHASE	BLOWER SIZE	FILTER SIZE	4 ROW COIL		6 ROW COIL	
									MANIFOLD CONNECTION	SHIPPING WEIGHT	MANIFOLD CONNECTION	SHIPPING WEIGHT
24SHW	2	2.05	3/8	1/4	115	1	9 X 6	16 X 25	7/8" O/D (SWT)	185	7/8" O/D (SWT)	205
36SHW	3	3.05	3/8	1/3	115	1	9 X 9	16 X 16 (2)	7/8" O/D (SWT)	205	7/8" O/D (SWT)	225
48SHW	4	4.0	3/8	1/2	115	1	10 X 10	16 X 20 (2)	7/8" O/D (SWT)	240	7/8" O/D (SWT)	265
60SHW	5	5.0	3/8	1/2	115	1	12 X 12	20 X 20 (2)	1-1/8" O/D (SWT)	290	1-1/8" O/D (SWT)	310

Notes: 1) All technical specifications subject to change without notice.
2) Additional charge for optional motors.
3) When **SHW** units are used with hot water coil the leaving air temperature must not exceed 150 degrees. At high altitude conditions, blower motor may cutout air lower LAT. Contact factory for information.
4) Contact factory for electric heat information (supplied by others)

Physical Data - Models 90SHW - 240SHW

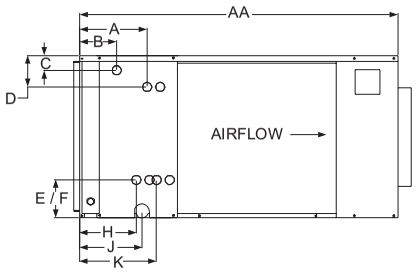

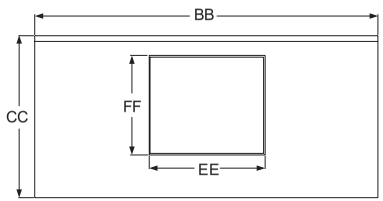

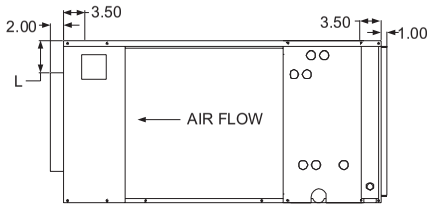

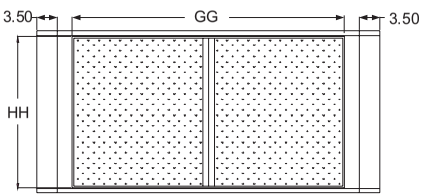

UNIT DIMENSIONS

MODEL	UNIT CABINET			BLOWER OUTLET		RETURN DUCT CONNECTION		STUBOUT LOCATION FOR WATER COILS										
	AA	BB	CC	EE	FF	GG	HH	A	B	C	D	E	F	G	H	J	K	L
90SHW4	52-1/2	54	27	19-1/8	16-3/8	45	25-1/4	11-1/8	6-1/8	2-7/16	5-1/8	6-7/16	6-7/16	1	9-3/8	10-1/4	12-5/8	1
120SHW4	52-1/2	57	32	19-1/8	16-3/8	48	30-1/4	11-1/8	6-1/8	2-7/16	5-1/8	6-7/16	6-7/16	1	9-3/8	10-1/4	12-5/8	6
180SHW4	56-1/2	66	39-1/2	44-3/4	16-3/8	57	37-3/4	11-1/8	6-1/8	2-7/16	5-1/8	6-7/16	6-7/16	1	9-3/8	10-1/4	12-5/8	9-5/16
240SHW4	62-1/2	66	52	44-3/4	16-3/8	57	50-1/4	11-1/8	6-1/8	2-7/16	5-1/8	6-7/16	6-7/16	1	9-3/8	10-1/4	12-5/8	21-3/4
90SHW6	52-1/2	54	27	19-1/8	16-3/8	45	25-1/4	13-5/16	6-1/8	2-7/16	5-1/8	6-7/16	6-7/16	1	11-1/2	10-1/4	14-13/16	1
120SHW6	52-1/2	57	32	19-1/8	16-3/8	48	30-1/4	13-5/16	6-1/8	2-7/16	5-1/8	6-7/16	6-7/16	1	11-1/2	10-1/4	14-13/16	6
180SHW6	56-1/2	66	39-1/2	44-3/4	16-3/8	57	37-3/4	13-5/16	6-1/8	2-7/16	5-1/8	6-7/16	6-7/16	1	11-1/2	10-1/4	14-13/16	9-5/16
240SHW6	62-1/2	66	52	44-3/4	16-3/8	57	50-1/4	13-5/16	6-1/8	2-7/16	5-1/8	6-7/16	6-7/16	1	11-1/2	10-1/4	14-13/16	21-3/4

Notes:
1) All drain connections are 3/4" MPT and located on same side as coil connections.
2) All units have knockouts on both sides for either (standard) or left side coil stub outs. (Looking with airflow) All coil connections must be on the same side of the unit.
3) 180SHW and 240SHW models have two blowers. Blower opening size is 16-3/8 X 16-5/8

GENERAL SPECIFICATIONS

MODEL	NOM. COOL TONS	FACE AREA SQ. FT.	TUBE SIZE	STD. MOTOR HP	VOLTS	PHASE	BLOWER SIZE	FILTER SIZE	4 ROW COIL		6 ROW COIL	
									MANIFOLD CONNECTION	SHIPPING WEIGHT	MANIFOLD CONNECTION	SHIPPING WEIGHT
90SHW	7-1/2	7.5	1/2	3/4	115/230	1	15 X 15	24 X 25 (2)	1-1/8" O/D (SWT)	450	1-1/8" O/D (SWT)	475
120SHW	10	9.6	1/2	1-1/2	230/460	3	15 X 15	26 X 29 (2)	1-3/8" O/D (SWT)	490	1-3/8" O/D (SWT)	535
180SHW	15	14.3	1/2	1-1/2	230/460	3	15 X 12 (2)	20 X 36.5 (3)	1-3/8" O/D (SWT)	670	1-3/8" O/D (SWT)	710
240SHW	20	19.1	1/2	3	230/460	3	15 X 12 (2	20 X 49 (3)	1-3/8" O/D (SWT)	835	1-3/8" O/D (SWT)	880

Notes:
1) All technical specifications subject to change without notice.
2) Additional charge for optional motors.
3) When **SHW** units are used with hot water coil the leaving air temperature must not exceed 150 degrees. At high altitude conditions, blower motor may cutout air lower LAT. Contact factory for information.
4) Contact factory for electric heat information (supplied by others)

Physical Data - Models 24SVW - 60SVW

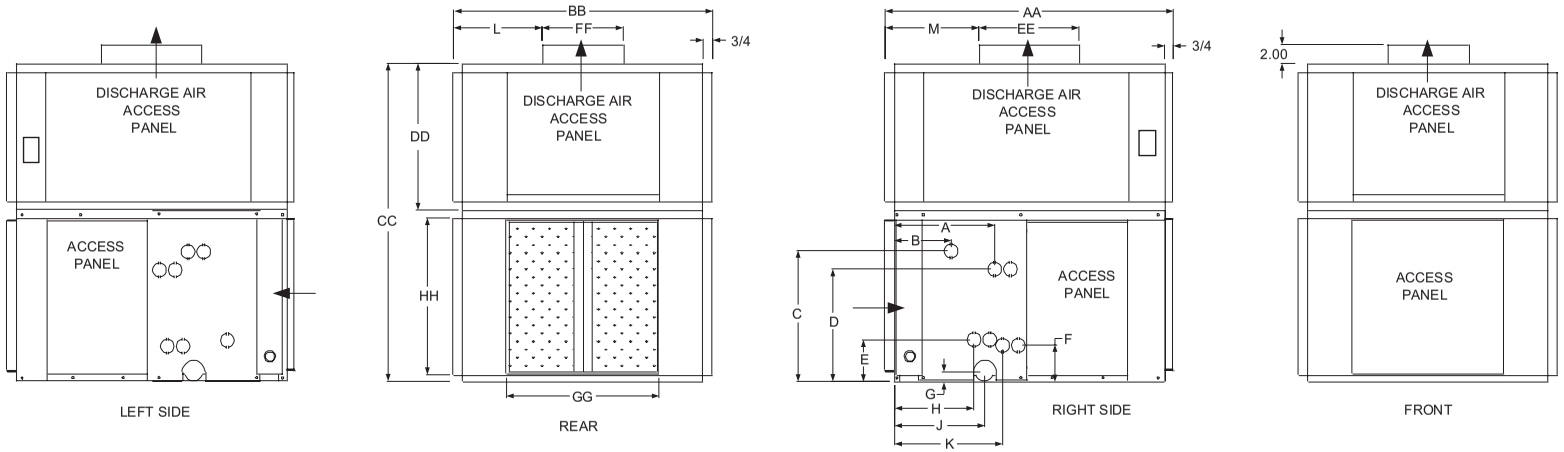

UNIT DIMENSIONS

MODEL	UNIT CABINET				BLOWER OUTLET		RETURN DUCT CONNECTION		STUBOUT LOCATION FOR WATER COILS											
	AA	BB	CC	DD	EE	FF	GG	HH	A	B	C	D	E	F	G	H	J	K	L	M
24SVW4	31-3/4	28-1/2	35-1/8	16-1/4	11	9	18	16-1/4	11-1/4	6-5/16	14-5/16	12-5/16	4-1/2	3-15/16	1	8-15/16	10	12	9-3/4	6-3/4
36SVW4	31-3/4	38	35-1/8	16-1/4	10-7/8	12-5/8	27-1/2	16-1/4	11-1/4	6-5/16	14-5/16	12-5/16	4-1/2	3-15/16	1	8-15/16	10	12	12-3/4	6-3/4
48SVW4	31-3/4	39-1/2	41-7/8	19	11-3/4	13-5/8	29	20-1/4	11-1/4	6-5/16	19	17	4-1/2	3-15/16	1	8-15/16	10	12	13	7
60SVW4	31-1/4	46-1/2	43-1/8	20-1/4	13-7/8	16	36	20-1/4	11-1/4	6-5/16	19	17	4-1/2	3-15/16	1	8-15/16	10	12	15-1/8	7-5/8
24SVW6	31-3/4	28-1/2	35-1/8	16-1/4	11	9	18	16-1/4	12-15/16	6-5/16	14-5/16	12-5/16	4-1/2	3-15/16	1	10-5/8	10	13-3/4	9-3/4	6-3/4
36SVW6	31-3/4	38	35-1/8	16-1/4	10-7/8	12-5/8	27-1/2	16-1/4	12-15/16	6-5/16	14-5/16	12-5/16	4-1/2	3-15/16	1	10-5/8	10	13-3/4	12-3/4	6-3/4
48SVW6	31-3/4	39-1/2	41-7/8	19	11-3/4	13-5/8	29	20-1/4	12-15/16	6-5/16	19	17	4-1/2	3-15/16	1	10-5/8	10	13-3/4	13	7
60SVW6	31-1/4	46-1/2	43-1/8	20-1/4	13-7/8	16	36	20-1/4	12-15/16	6-5/16	19	17	4-1/2	3-15/16	1	10-5/8	10	13-3/4	15-1/8	7-5/8

Notes: 1) All drain connections are 3/4" MPT and located on same side as coil connections.
2) All units have knockouts on both sides for either (standard) or left side coil stub outs. (Looking with airflow) All coil connections must be on the same side of the unit.

GENERAL SPECIFICATIONS

MODEL	NOM. COOL TONS	FACE AREA SQ. FT.	TUBE SIZE	STD. MOTOR HP	VOLTS	PHASE	BLOWER SIZE	FILTER SIZE	4 ROW COIL		6 ROW COIL	
									MANIFOLD CONNECTION	SHIPPING WEIGHT	MANIFOLD CONNECTION	SHIPPING WEIGHT
24SVW	2	2.05	3/8	1/4	115	1	9 X 6	16 X 25	7/8" O/D (SWT)	185	7/8" O/D (SWT)	205
36SVW	3	3.05	3/8	1/3	115	1	9 X 9	16 X 16 (2)	7/8" O/D (SWT)	225	7/8" O/D (SWT)	245
48SVW	4	4.0	3/8	1/2	115	1	10 X 10	16 X 20 (2)	7/8" O/D (SWT)	265	7/8" O/D (SWT)	290
60SVW	5	5.0	3/8	1/2	115	1	12 X 12	20 X 20 (2)	1-1/8" O/D (SWT)	345	1-1/8" O/D (SWT)	365

Notes: 1) All technical specifications subject to change without notice.
2) Additional charge for optional motors.
3) When **SVW** units are used with hot water coil the leaving air temperature must not exceed 150 degrees. At high altitude conditions, blower motor may cutout air lower LAT. Contact factory for information.
4) Contact factory for electric heat information (supplied by others)

Physical Data - Models 90SVW - 240SVW

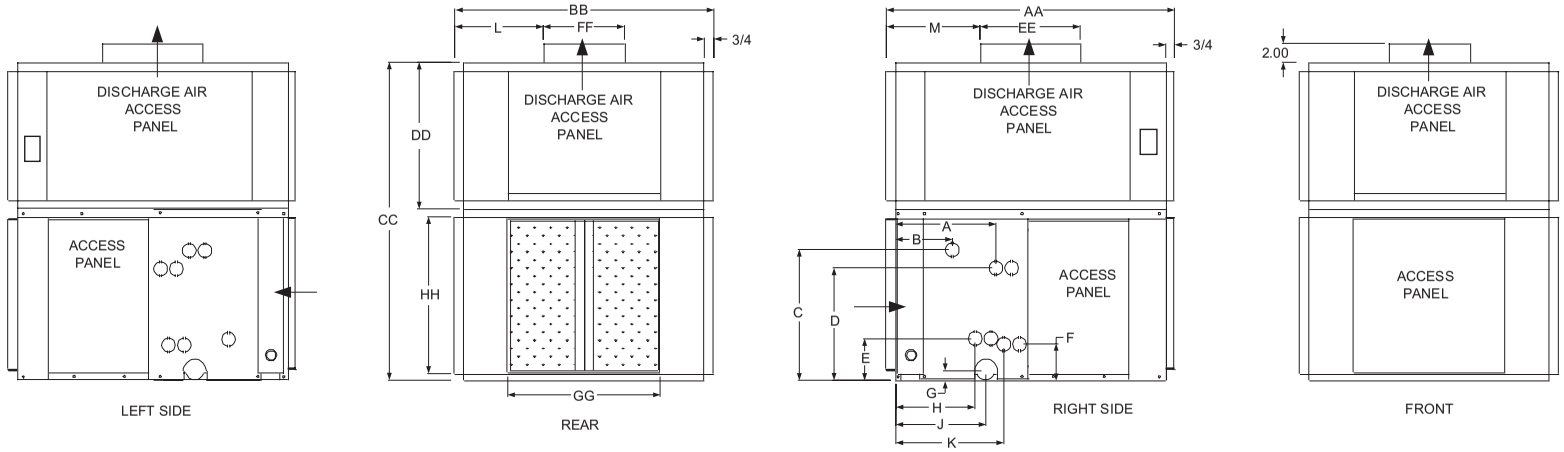

UNIT DIMENSIONS

MODEL	UNIT CABINET				BLOWER OUTLET		RETURN DUCT CONNECTION		STUBOUT LOCATION FOR WATER COILS											
	AA	BB	CC	DD	EE	FF	GG	HH	A	B	C	D	E	F	G	H	J	K	L	M
90SVW4	37-1/2	55-1/2	51	24	16-3/8	19-1/8	45	25-1/4	11-1/2	6-1/2	24-1/2	21-3/4	6-3/8	6-3/8	1	9-3/4	10-5/8	12-1/2	18-1/4	11-1/4
120SVW4	37-1/2	58-1/2	56	24	16-3/8	19-1/8	48	30-1/4	11-1/2	6-1/2	29-1/2	36-3/4	6-3/8	6-3/8	1	9-3/4	10-5/8	12-1/2	19-3/4	9-3/4
180SVW4	46-1/4	66	63-1/8	23-5/8	16-1/2	45	57	37-3/4	11-1/2	6-1/2	37	34-1/4	6-3/8	6-3/8	1	9-3/4	10-5/8	12-1/2	11-1/4	9
240SVW4	46-1/4	66	75-1/2	23-5/8	16-1/2	45	57	50-1/4	11-1/2	6-1/2	49-1/2	46-3/4	6-3/8	6-3/8	1	9-3/4	10-5/8	12-1/2	11-1/4	9
90SVW6	37-1/2	55-1/2	51	24	16-3/8	19-1/8	45	25-1/4	13-5/8	6-1/2	24-1/2	21-3/4	6-3/8	6-3/8	1	11-7/8	10-5/8	14-11/16	18-1/4	11-1/4
120SVW6	37-1/2	58-1/2	56	24	16-3/8	19-1/8	48	30-1/4	13-5/8	6-1/2	29-1/2	36-3/4	6-3/8	6-3/8	1	11-7/8	10-5/8	14-11/16	19-3/4	9-3/4
180SVW6	46-1/4	66	63-1/8	23-5/8	16-1/2	45	57	37-3/4	13-5/8	6-1/2	37	34-1/4	6-3/8	6-3/8	1	11-7/8	10-5/8	14-11/16	11-1/4	9
240SVW6	46-1/4	66	75-1/2	23-5/8	16-1/2	45	57	50-1/4	13-5/8	6-1/2	49-1/2	46-3/4	6-3/8	6-3/8	1	11-7/8	10-5/8	14-11/16	11-1/4	9

Notes: 1) All drain connections are 3/4" MPT and located on same side as coil connections.
2) All units have knockouts on both sides for either (standard) or left side coil stub outs. (Looking with airflow) All coil connections must be on the same side of the unit.

GENERAL SPECIFICATIONS

MODEL	NOM. COOL TONS	FACE AREA SQ. FT.	TUBE SIZE	STD. MOTOR HP	VOLTS	PHASE	BLOWER SIZE	FILTER SIZE	4 ROW COIL		6 ROW COIL	
									MANIFOLD CONNECTION	SHIPPING WEIGHT	MANIFOLD CONNECTION	SHIPPING WEIGHT
90SVW	7-1/2	7.5	1/2	3/4	115/230	1	15 X 15	24 X 25 (2)	1-1/8" O/D (SWT)	460	1-1/8" O/D (SWT)	485
120SVW	10	9.6	1/2	1-1/2	230/460	3	15 X 15	26 X 29 (2)	1-3/8" O/D (SWT)	575	1-3/8" O/D (SWT)	620
180SVW	15	14.3	1/2	1-1/2	230/460	3	15 X 12 (2)	20 X 36.5 (3)	1-3/8" O/D (SWT)	805	1-3/8" O/D (SWT)	795
240SVW	20	19.1	1/2	3	230/460	3	15 X 12 (2	20 X 49 (3)	1-3/8" O/D (SWT)	925	1-3/8" O/D (SWT)	965

Notes: 1) All technical specifications subject to change without notice.
2) Additional charge for optional motors.
3) When **SVW** units are used with hot water coil the leaving air temperature must not exceed 150 degrees. At high altitude conditions, blower motor may cutout air lower LAT. Contact factory for information.
4) Contact factory for electric heat information (supplied by others)

2 - 5 TON FAN PERFORMANCE (SHW and SVW)

MODEL	NOMINAL CFM	COIL FACE VELOCITY FPM	TOTAL STATIC PRESSURE - INCHES OF WATER									
			0.5		0.6		0.7		0.8		0.9	
			RPM	HP	RPM	HP	RPM	HP	RPM	HP	RPM	HP
24SHW/ 24SVW	600	300	770	1/6	840	1/6	900	1/6	990	1/4	1050	1/4
	700	350	780	1/6	850	1/6	910	1/4	990	1/4	1040	1/4
	800	400	800	1/4	860	1/4	910	1/4	990	1/4	1040	1/4
	900	450	810	1/4	880	1/4	925	1/4	1000	1/4	1050	1/3
	1000	500	830	1/4	900	1/4	950	1/3	1000	1/3	1060	1/3
36SHW/ 36SVW	1000	333	805	1/4	880	1/4	940	1/3	1000	1/3	1060	1/3
	1100	367	810	1/4	890	1/3	940	1/3	1000	1/3	1050	1/2
	1200	400	820	1/3	900	1/3	950	1/3	1005	1/2	1050	1/2
	1300	434	840	1/3	905	1/3	960	1/3	1010	1/2	1060	1/2
	1400	466	870	1/3	920	1/3	980	1/2	1020	1/2	1090	1/2
48SHW/ 48SVW	1400	350	720	1/3	775	1/3	825	1/2	870	1/3	910	1/2
	1500	375	740	1/3	785	1/2	830	1/2	875	1/2	920	1/2
	1600	400	750	1/2	800	1/2	840	1/2	890	1/2	925	3/4
	1700	425	770	1/2	810	1/2	860	1/2	895	1/2	930	3/4
	1800	450	785	1/2	825	1/2	870	1/2	910	1/2	945	3/4
60SHW/ 60SVW	1800	360	580	1/2	630	1/2	680	1/2	725	1/2	770	3/4
	1900	380	580	1/2	630	1/2	680	1/2	725	1/2	775	3/4
	2000	400	590	1/2	635	1/2	680	1/2	730	1/2	770	3/4
	2100	420	600	1/2	640	1/2	690	1/2	730	3/4	770	3/4
	2200	440	600	1/2	645	1/2	690	1/2	735	3/4	775	3/4

7-1/2 - 20 TON FAN PERFORMANCE (SHW and SVW)

MODEL	NOMINAL CFM	COIL FACE VELOCITY FPM	TOTAL STATIC PRESSURE - INCHES OF WATER									
			0.6		0.7		0.8		0.9		1.0	
			RPM	HP	RPM	HP	RPM	HP	RPM	HP	RPM	HP
90SHW/ 90SVW	2500	333	580	1/2	600	3/4	640	3/4	690	3/4	710	3/4
	2750	366	580	1/2	605	3/4	640	3/4	690	3/4	710	3/4
	3000	400	580	3/4	610	3/4	640	3/4	680	3/4	710	1
	3250	433	590	3/4	630	1	660	1	700	1	715	1
	3500	466	605	1	635	1	670	1	700	1	720	1
120SHW/ 120SVW	3400	354	600	1	630	1	670	1	700	1	730	1-1/2
	3700	385	610	1	650	1	680	1-1/2	705	1-1/2	740	1-1/2
	4000	417	630	1-1/2	670	1-1/2	695	1-1/2	710	1-1/2	750	1-1/2
	4300	448	650	1-1/2	685	1-1/2	705	1-1/2	730	1-1/2	770	2
	4600	480	670	1-1/2	700	2	720	2	760	2	790	2
180SHW/ 180SVW	5200	364	590	1-1/2	620	1-1/2	650	1-1/2	690	1-1/2	710	1-1/2
	5600	391	600	1-1/2	630	1-1/2	670	1-1/2	700	1-1/2	720	2
	6000	420	610	1-1/2	640	1-1/2	680	1-1/2	700	2	730	2
	6400	447	625	2	660	2	690	2	710	2	740	3
	6800	475	640	2	680	2	700	3	720	3	760	3
240SHW/ 240SVW	6000	314	610	1-1/2	640	1-1/2	670	1-1/2	700	2	730	2
	7000	366	640	2	690	2	710	3	740	3	760	3
	8000	419	700	3	720	3	750	3	790	3	800	3
	9000	470	730	5	760	5	800	5	810	5	830	5
	10000	500	800	5	820	5	840	5	880	5	900	5

Notes:

1) Shaded area indicates the R.P.M. and C.F.M. range of the standard motor and pulleys.
2) To determine available brake horsepower (BHP), take above nominal HP and multiply as follows:
   For 1/4 HP to 3/4 HP motors: BHP = nominal X 1.25
   For 1 HP to 5 HP motors: BHP = nominal X 1.15
3) Special pulleys and motors can be factory furnished at an additional charge.
4) Horsepower tabulated indicates minimum recommended motor H.P.
5) **Rated in accordance with ARI Standard 430.**

2 - 5 TON FAN PERFORMANCE (SHW and SVW) (Con't. from previous page)

NOMINAL CFM	COIL FACE VELOCITY FPM	TOTAL STATIC PRESSURE - INCHES OF WATER											
		1.0		1.2		1.4		1.6		1.8		2.0	
		RPM	HP	RPM	HP	RPM	HP	RPM	HP	RPM	HP	RPM	HP
600	**300**	1105	1/4	1210	1/3	1310	1/3	1420	1/3	1510	1/2	- - -	- - -
700	**350**	1100	1/4	1200	1/3	1300	1/3	1405	1/2	1500	1/2	- - -	- - -
800	**400**	1100	1/3	1195	1/3	1295	1/2	1395	1/2	1470	1/2	- - -	- - -
900	**450**	1100	1/3	1190	1/3	1290	1/2	1390	1/2	1460	1/2	- - -	- - -
1000	**500**	1110	1/3	1200	1/2	1295	1/2	1390	1/2	1450	3/4	- - -	- - -
1000	**333**	1110	1/2	1230	1/2	**1335**	**1/2**	**1440**	**3/4**	**1540**	**3/4**	- - -	- - -
1100	**367**	1110	1/2	1215	1/2	1325	1/2	**1425**	**3/4**	**1520**	**3/4**	- - -	- - -
1200	**400**	1110	1/2	1210	1/2	1315	3/4	1415	3/4	**1500**	**3/4**	- - -	- - -
1300	**434**	1110	1/2	1220	1/2	1315	3/4	1410	3/4	1490	3/4	- - -	- - -
1400	**466**	1120	1/2	1220	3/4	1320	3/4	1410	3/4	1500	3/4	- - -	- - -
1400	**350**	955	1/2	1050	3/4	1135	3/4	1215	3/4	**1300**	**1**	**1380**	**1**
1500	**375**	960	1/2	1050	3/4	1135	3/4	1210	3/4	1295	1	1370	1
1600	**400**	970	3/4	1050	3/4	1140	3/4	1210	3/4	1290	1	1360	1
1700	**425**	980	3/4	1065	3/4	1140	3/4	1210	3/4	1290	1	1350	1
1800	**450**	985	3/4	1070	3/4	1150	3/4	1215	1	1280	1	- - -	- - -
1800	**360**	820	3/4	900	3/4	**975**	**3/4**	**1050**	**1**	**1125**	**1**	**1200**	**1-1/2**
1900	**380**	815	3/4	895	3/4	970	3/4	**1045**	**1**	**1120**	**1**	**1190**	**1-1/2**
2000	**400**	815	3/4	890	3/4	965	1	1040	1	**1110**	**1**	**1180**	**1-1/2**
2100	**420**	815	3/4	885	3/4	960	1	1035	1	1105	1-1/2	1175	1-1/2
2200	**440**	815	3/4	885	3/4	960	1	1030	1	1100	1-1/2	1165	1-1/2

7-1/2 - 20 TON FAN PERFORMANCE (SHW and SVW) (Con't. from previous page)

NOMINAL CFM	COIL FACE VELOCITY FPM	TOTAL STATIC PRESSURE - INCHES OF WATER									
		1.2		1.4		1.6		1.8		2.0	
		RPM	HP	RPM	HP	RPM	HP	RPM	HP	RPM	HP
2500	**333**	790	3/4	850	1	915	1-1/2	990	1-1/2	1030	1-1/2
2750	**366**	780	1	840	1	905	1-1/2	980	1-1/2	1020	1-1/2
3000	**400**	780	1	835	1-1/2	900	1-1/2	970	1-1/2	1010	1-1/2
3250	**433**	790	1-1/2	840	1-1/2	900	1-1/2	950	1-1/2	1005	2
3500	**466**	790	1-1/2	845	1-1/2	900	1-1/2	950	2	1005	2
3400	**354**	790	1-1/2	850	1-1/2	900	1-1/2	950	2	1005	2
3700	**385**	800	1-1/2	855	1-1/2	905	2	950	2	1005	2
4000	**417**	805	1-1/2	860	2	910	2	960	2	1005	2
4300	**448**	820	2	875	2	915	3	970	3	1010	3
4600	**480**	830	2	890	3	930	3	980	3	1015	3
5200	**364**	780	2	830	2	900	2	950	3	1000	3
5600	**391**	790	2	840	2	905	3	950	3	1000	3
6000	**420**	795	2	850	3	910	3	960	3	1000	3
6400	**447**	800	3	860	3	915	3	970	3	1000	5
6800	**475**	810	3	870	3	920	5	975	5	1005	5
6000	**314**	795	2	850	3	910	3	960	3	1000	3
7000	**366**	810	3	880	3	920	5	960	5	1000	5
8000	**419**	850	5	900	5	940	5	990	5	1020	5
9000	**470**	890	5	920	5	980	5	- - -	- - -	- - -	- - -
10000	**500**	- - -	- - -	- - -	- - -	- - -	- - -	- - -	- - -	- - -	- - -

Notes:

1) Special pulleys and motors can be factory furnished at an additional charge.
2) To determine available brake horsepower (BHP), take above nominal HP and multiply as follows:
   For 1/4 HP to 3/4 HP motors: BHP = nominal X 1.25
   For 1 HP to 5 HP motors: BHP = nominal X 1.15
3) Horsepower tabulated indicates minimum recommended motor H.P.
4) Numbers indicated by underlined type may result in unstable fan performance
5) **Rated in accordance with ARI Standard 430.**

24SHW / SVW

CHILLED WATER COOLING CAPACITIES

ENT. WTR. °F	C.F.M.	24SHW4 / 24SVW4 (4 ROW COIL)								24SHW6 / 24SVW6 (6 ROW COIL)							
		G.P.M.	WTR. P.D. FT.	80°F DB/67°F WB ENT. AIR			75°F DB/63°F WB ENT. AIR			G.P.M.	WTR. P.D. FT.	80°F DB/67°F WB ENT. AIR			75°F DB/63°F WB ENT. AIR		
				TOTAL MBH	SENS. MBH	TEMP. RISE	TOTAL MBH	SENS. MBH	TEMP. RISE			TOTAL MBH	SENS. MBH	TEMP. RISE	TOTAL MBH	SENS. MBH	TEMP. RISE
42	600	3.0	1.2	19.6	13.9	13.0	14.9	12.1	9.9	3.0	1.3	22.3	15.7	14.9	17.0	13.6	11.4
	800			21.7	16.5	14.5	16.6	14.5	11.0			24.9	18.8	16.6	19.0	16.5	12.7
	1000			23.2	18.7	15.5	17.7	16.6	11.8			26.7	21.6	17.8	20.4	19.1	13.6
	600	6.0	4.4	24.8	15.9	8.3	18.9	13.7	6.3	5.0	3.3	26.9	17.5	10.8	20.6	15.0	8.2
	800			29.0	19.2	9.7	22.2	16.7	7.4			31.3	21.2	12.5	24.0	18.4	9.6
	1000			32.5	22.1	10.8	24.8	19.3	8.3			34.9	24.6	13.9	26.6	21.5	10.7
	600	9.0	9.3	26.7	16.6	5.9	20.4	14.3	4.5	7.0	6.1	29.6	18.5	8.4	22.6	15.9	6.4
	800			31.8	20.3	7.1	24.3	17.6	5.4			35.2	22.8	10.0	26.9	19.6	7.7
	1000			36.3	23.6	8.1	27.7	20.4	6.2			39.8	26.5	11.4	30.4	23.0	8.7
45	600	3.0	1.2	17.9	13.3	12.0	13.7	11.6	9.1	3.0	1.3	20.5	14.9	13.7	15.6	13.1	10.4
	800			19.9	15.8	13.3	15.2	14.0	10.1			22.8	18.0	15.2	17.4	15.9	11.6
	1000			21.3	18.1	14.2	17.5	17.5	11.7			24.5	20.8	16.4	21.4	21.4	14.2
	600	6.0	4.4	22.7	15.1	7.6	17.4	13.1	5.8	5.0	3.3	24.7	16.6	9.9	18.9	14.3	7.5
	800			26.6	18.3	8.9	20.3	16.0	6.8			28.7	20.2	11.5	22.0	17.6	8.8
	1000			29.8	21.1	9.9	22.7	18.5	7.6			32.0	23.5	12.8	24.4	20.6	9.8
	600	9.0	9.3	24.5	15.8	5.4	18.7	13.6	4.2	7.0	6.1	27.1	17.5	7.7	20.7	15.1	5.9
	800			29.2	19.3	6.5	22.3	16.8	5.0			32.3	21.6	9.2	24.6	18.7	7.0
	1000			33.3	22.5	7.4	25.4	19.5	5.6			36.5	25.2	10.4	27.9	22.0	8.0
50	600	3.0	1.2	15.2	12.3	10.2	11.6	10.9	7.8	3.0	1.3	17.4	13.8	11.6	13.3	12.2	8.9
	800			16.9	14.8	11.3	12.8	12.8	8.6			19.4	16.8	12.9	15.6	15.6	10.4
	1000			18.1	17.0	12.1	14.6	14.6	9.7			20.9	19.5	13.9	17.8	17.8	11.9
	600	6.0	4.4	19.3	13.8	6.4	14.7	12.0	4.9	5.0	3.3	21.0	15.1	8.4	16.0	13.2	6.4
	800			22.6	16.8	7.5	17.3	14.8	5.8			24.4	18.6	9.8	18.7	16.3	7.5
	1000			25.3	19.5	8.4	19.3	17.2	6.4			27.2	21.7	10.9	20.8	19.2	8.3
	600	9.0	9.3	20.8	14.3	4.6	15.9	12.5	3.5	7.0	6.1	23.1	15.9	6.6	17.6	13.8	5.0
	800			24.8	17.6	5.5	19.0	15.5	4.2			27.4	19.7	7.8	20.9	17.2	6.0
	1000			28.3	20.6	6.3	21.6	18.1	4.8			31.1	23.2	8.9	23.7	20.3	6.8

HOT WATER HEATING CAPACITIES

24SHW4 / 24SVW4 (4 ROW COIL)					
180°F ENTERING WATER TEMPERATURE					
CFM	GPM	WTR. P.D. FT.	TOTAL MBH	LVG. AIR °F	LVG. WTR °F
600	3.0	1.2	47.5	143	148
800			56.4	135	142
1000			64.3	130	137
600	6.0	4.4	52.0	150	163
800			63.2	143	159
1000			73.3	138	156
600	9.0	9.3	53.6	153	168
800			65.8	146	165
1000			76.8	141	163

*** 70 degree return air**

24HWK (2 ROW COIL)					
180°F ENTERING WATER TEMPERATURE					
CFM	GPM	WTR. P.D. FT.	TOTAL MBH	LVG. AIR °F	LVG. WTR °F
600	3.0	0.9	33.3	121	158
800			38.4	115	154
1000			42.9	110	151
600	6.0	3.2	36.6	126	168
800			43.2	120	166
1000			49.0	115	164
600	9.0	6.7	37.9	128	172
800			45.3	122	170
1000			51.8	118	168

*** 70 degree return air**

Notes:
1) See page 22 for hot water heating correction factors.
2) Optional 6 row coils should not be used for heating.
3) Optional 2 row hot water coils can be factory or field installed.
4) When these units are used for hot water heating the leaving air temperature must not exceed 150 degrees. At high altitude conditions, blower motor may cutout at a lower LAT. Contact factory for information.

36SHW / SVW

CHILLED WATER COOLING CAPACITIES

ENT. WTR. °F	C.F.M.	36SHW4 / 36SVW4 (4 ROW COIL)								36SHW6 / 36SVW6 (6 ROW COIL)							
		G.P.M.	WTR. P.D. FT.	80°F DB/67°F WB ENT. AIR			75°F DB/63°F WB ENT. AIR			G.P.M.	WTR. P.D. FT.	80°F DB/67°F WB ENT. AIR			75°F DB/63°F WB ENT. AIR		
				TOTAL MBH	SENS. MBH	TEMP. RISE	TOTAL MBH	SENS. MBH	TEMP. RISE			TOTAL MBH	SENS. MBH	TEMP. RISE	TOTAL MBH	SENS. MBH	TEMP. RISE
42	1000	4.0	2.0	29.6	21.9	14.8	22.6	19.2	11.3	4.0	2.7	35.6	25.4	17.8	27.2	22.1	13.6
	1200			31.4	24.4	15.7	24.0	21.5	12.0			38.0	28.4	19.0	29.1	25.0	14.5
	1400			33.1	26.7	16.6	25.3	23.7	12.7			40.5	31.5	20.2	30.9	27.7	15.5
	1000	8.0	7.5	39.0	25.4	9.8	29.8	22.0	7.4	7.0	7.5	45.0	29.0	12.9	34.4	25.0	9.8
	1200			43.0	28.7	10.7	32.8	24.9	8.2			49.7	33.0	14.2	38.0	28.5	10.8
	1400			46.5	31.6	11.6	35.5	27.6	8.9			53.9	36.6	15.4	41.2	31.8	11.8
	600	12.0	16.3	42.6	26.8	7.1	32.5	23.1	5.4	10.0	14.5	49.5	31.0	9.9	37.8	26.5	7.6
	800			47.5	30.4	7.9	36.3	26.3	6.0			55.5	35.3	11.1	42.4	30.3	8.5
	1000			52.0	33.7	8.7	39.7	29.2	6.6			60.9	39.3	12.2	46.5	33.9	9.3
45	1000	4.0	2.0	27.2	21.0	13.6	21.7	18.5	10.4	4.0	2.7	32.6	24.2	16.3	24.9	21.3	12.5
	1200			28.8	23.4	14.4	22.0	20.7	11.0			34.9	27.3	17.4	36.7	24.0	13.3
	1400			30.4	25.8	15.2	25.0	25.0	12.5			37.1	30.3	18.6	28.4	26.8	14.2
	1000	8.0	7.5	35.8	24.2	8.9	27.3	21.0	6.8	7.0	7.5	41.3	27.6	11.8	31.5	23.9	9.0
	1200			39.4	27.3	9.9	30.1	23.9	7.5			45.6	31.3	13.0	34.8	27.2	10.0
	1400			42.6	30.2	10.7	32.6	26.4	8.1			49.5	34.9	14.1	37.8	30.4	10.8
	600	12.0	16.3	39.0	25.5	6.5	29.8	22.0	5.0	10.0	14.5	45.4	29.2	9.1	34.7	25.2	6.9
	800			43.6	28.9	7.3	33.3	25.1	5.5			50.9	33.4	10.2	38.9	28.9	7.8
	1000			47.7	32.1	7.9	36.4	27.9	6.1			55.9	37.3	11.2	42.7	32.3	8.5
50	1000	4.0	2.0	23.1	19.5	11.5	17.2	17.2	8.6	4.0	2.7	27.7	22.4	13.9	21.2	19.8	10.6
	1200			24.5	21.9	12.2	19.1	19.1	9.5			29.7	25.4	14.8	23.6	23.6	11.8
	1400			25.8	24.2	12.9	20.8	20.8	10.4			31.6	28.3	15.8	26.0	26.0	13.0
	1000	8.0	7.5	30.4	22.2	7.6	23.2	19.4	5.8	7.0	7.5	35.1	25.2	10.0	26.8	22.0	7.7
	1200			33.5	25.1	8.4	25.6	22.1	6.4			38.8	28.7	11.1	29.6	25.2	8.5
	1400			36.2	27.9	9.1	27.7	24.6	6.9			42.1	32.1	12.0	32.1	28.2	9.2
	600	12.0	16.3	33.2	23.2	5.5	25.3	20.3	4.2	10.0	14.5	38.6	26.5	7.7	29.5	23.1	5.9
	800			37.1	26.4	6.2	28.3	23.2	4.7			43.3	30.4	8.7	33.0	26.5	6.6
	1000			40.5	29.4	6.8	31.0	25.8	5.2			47.5	34.1	9.5	36.3	29.8	7.3

HOT WATER HEATING CAPACITIES

36SHW4 / 36SVW4 (4 ROW COIL)					
180°F ENTERING WATER TEMPERATURE					
CFM	GPM	WTR. P.D. FT.	TOTAL MBH	LVG. AIR °F	LVG. WTR °F
1000	4.0	2.0	75.5	140	142
1200			83.9	135	138
1400			91.7	131	134
1000	8.0	7.5	83.9	148	159
1200			94.7	143	156
1400			105.1	140	154
1000	12.0	16.3	86.8	150	165
1200			98.9	146	163
1400			110.1	143	162

*** 70 degree return air**

36HWK (2 ROW COIL)					
180°F ENTERING WATER TEMPERATURE					
CFM	GPM	WTR. P.D. FT.	TOTAL MBH	LVG. AIR °F	LVG. WTR °F
1000	4.0	1.6	53.3	119	153
1200			58.7	115	150
1400			65.4	112	148
1000	8.0	6.1	59.4	125	165
1200			66.2	121	164
1400			72.5	118	162
1000	12.0	13.1	61.5	127	170
1200			68.7	123	168
1400			75.4	120	167

*** 70 degree return air**

Notes:
1) See page 22 for hot water heating correction factors.
2) Optional 6 row coils should not be used for heating.
3) Optional 2 row hot water coils can be factory or field installed.
4) When these units are used for hot water heating the leaving air temperature must not exceed 150 degrees. At high altitude conditions, blower motor may cutout at a lower LAT. Contact factory for information.

48SHW / SVW

CHILLED WATER COOLING CAPACITIES

ENT. WTR. °F	C.F.M.	48SHW4 / 48SVW4 (4 ROW COIL)								48SHW6 / 48SVW6 (6 ROW COIL)							
		G.P.M.	WTR. P.D. FT.	80°F DB/67°F WB ENT. AIR			75°F DB/63°F WB ENT. AIR			G.P.M.	WTR. P.D. FT.	80°F DB/67°F WB ENT. AIR			75°F DB/63°F WB ENT. AIR		
				TOTAL MBH	SENS. MBH	TEMP. RISE	TOTAL MBH	SENS. MBH	TEMP. RISE			TOTAL MBH	SENS. MBH	TEMP. RISE	TOTAL MBH	SENS. MBH	TEMP. RISE
42	1400	6.0	3.9	42.9	31.0	14.3	32.8	27.2	10.9	5.0	2.3	45.6	33.8	18.2	34.8	29.6	13.9
	1600			45.1	33.6	15.0	34.5	29.6	11.5			47.5	36.7	19.0	36.3	32.3	14.5
	1800			46.5	35.9	15.5	35.5	31.6	11.8			48.7	39.3	19.5	37.2	34.7	14.9
	1400	10.0	10.3	52.6	34.7	10.5	40.2	30.1	8.0	8.0	5.5	57.0	38.2	14.2	43.5	33.1	10.9
	1600			56.4	37.9	11.3	43.1	32.9	8.6			60.7	41.7	15.2	46.3	36.2	11.6
	1800			59.7	40.7	11.9	45.6	35.5	9.1			63.7	44.9	15.9	48.7	39.2	12.2
	1400	13.0	17.0	56.3	36.1	8.7	43.0	31.2	6.6	11.0	10.1	63.6	40.9	11.6	48.6	35.2	8.8
	1600			60.8	39.6	9.4	46.5	34.3	7.1			68.6	44.8	12.5	52.4	38.7	9.5
	1800			65.0	42.8	10.0	49.6	37.1	7.6			73.1	48.5	13.3	55.8	42.0	10.1
45	1400	6.0	3.9	39.4	29.7	13.1	30.1	26.1	10.0	5.0	2.3	41.8	32.4	16.7	31.9	28.5	12.8
	1600			41.4	32.3	13.8	31.6	28.5	10.5			43.6	35.3	17.4	33.3	31.2	13.3
	1800			42.6	34.5	14.2	32.6	30.5	10.9			44.7	37.8	17.9	39.6	39.6	15.8
	1400	10.0	10.3	48.3	33.0	9.7	36.9	28.8	7.4	8.0	5.5	52.3	36.4	13.1	39.9	31.7	10.0
	1600			51.8	26.1	10.4	39.5	31.5	7.9			55.7	39.8	13.9	42.5	34.7	10.6
	1800			54.7	38.9	10.9	41.8	34.1	8.4			58.4	42.9	14.6	44.6	37.6	11.2
	1400	13.0	17.0	51.6	34.3	7.9	39.4	29.8	6.1	11.0	10.1	58.4	38.8	10.6	44.6	33.5	8.1
	1600			55.8	37.6	8.6	42.6	32.7	6.6			63.0	42.6	11.4	48.1	36.9	8.7
	1800			59.6	40.7	9.2	45.5	35.5	7.0			67.0	46.2	12.2	51.2	40.2	9.3
50	1400	6.0	3.9	33.5	27.6	11.2	24.2	24.2	8.1	5.0	2.3	35.5	30.2	14.2	28.4	28.4	11.4
	1600			35.2	30.1	11.7	26.1	26.1	8.7			37.1	32.9	14.6	30.7	30.7	12.3
	1800			36.2	32.2	12.1	28.0	28.0	9.3			38.0	35.5	15.2	33.0	33.0	13.2
	1400	10.0	10.3	41.0	30.3	8.2	31.3	26.6	6.3	8.0	5.5	44.4	33.4	11.1	33.9	29.3	8.5
	1600			44.0	33.2	8.8	33.6	29.3	6.7			47.3	36.6	11.8	36.1	32.3	9.0
	1800			46.5	35.9	9.3	35.5	31.7	7.1			49.7	39.7	12.4	37.9	35.0	9.5
	1400	13.0	17.0	43.9	31.4	6.8	33.5	27.5	5.2	11.0	10.1	49.6	35.4	9.0	37.9	30.9	6.9
	1600			47.4	34.5	7.3	36.2	30.3	5.6			53.5	39.0	11.8	40.9	34.1	7.4
	1800			50.7	37.4	7.8	38.7	32.9	6.0			57.0	42.4	10.4	43.5	37.2	7.9

HOT WATER HEATING CAPACITIES

48SHW4 / 48SVW4 (4 ROW COIL)					
180°F ENTERING WATER TEMPERATURE					
CFM	GPM	WTR. P.D. FT.	TOTAL MBH	LVG. AIR °F	LVG. WTR °F
1400	6.0	3.9	106.3	140	145
1600			114.9	137	142
1800			123.3	133	139
1400	10.0	10.3	114.9	146	157
1600			125.3	143	155
1800			135.3	140	153
1400	13.0	17.0	118.0	148	162
1600			129.4	145	160
1800			140.0	142	158

*** 70 degree return air**

48HWK (2 ROW COIL)					
180°F ENTERING WATER TEMPERATURE					
CFM	GPM	WTR. P.D. FT.	TOTAL MBH	LVG. AIR °F	LVG. WTR °F
1400	5.0	2.0	72.8	118	151
1600			78.0	115	149
1800			82.7	113	147
1400	8.0	4.8	79.2	122	160
1600			85.4	119	159
1800			91.4	117	157
1400	12.0	10.4	83.3	125	166
1600			90.2	122	165
1800			97.0	120	164

*** 70 degree return air**

Notes:
1) See page 22 for hot water heating correction factors.
2) Optional 6 row coils should not be used for heating.
3) Optional 2 row hot water coils can be factory or field installed.
4) When these units are used for hot water heating the leaving air temperature must not exceed 150 degrees. At high altitude conditions, blower motor may cutout at a lower LAT. Contact factory for information.

60SHW / SVW

CHILLED WATER COOLING CAPACITIES

ENT. WTR. °F	C.F.M.	60SHW4 / 60SVW4 (4 ROW COIL)								60SHW6 / 60SVW6 (6 ROW COIL)							
		G.P.M.	WTR. P.D. FT.	80°F DB/67°F WB ENT. AIR			75°F DB/63°F WB ENT. AIR			G.P.M.	WTR. P.D. FT.	80°F DB/67°F WB ENT. AIR			75°F DB/63°F WB ENT. AIR		
				TOTAL MBH	SENS. MBH	TEMP. RISE	TOTAL MBH	SENS. MBH	TEMP. RISE			TOTAL MBH	SENS. MBH	TEMP. RISE	TOTAL MBH	SENS. MBH	TEMP. RISE
42	1800	6.0	1.8	48.7	37.4	16.2	37.2	33.0	12.4	6.0	1.6	57.5	43.0	19.2	43.9	37.7	14.6
	2000			49.0	39.3	16.3	37.4	34.8	12.5			57.8	45.3	19.3	44.2	39.9	14.7
	2200			49.6	41.3	16.5	43.1	43.1	14.4			58.8	47.8	19.6	44.9	42.3	15.0
	1800	11.0	5.7	63.6	43.0	11.6	48.6	37.4	8.8	9.0	3.4	69.6	47.6	15.5	53.2	41.4	11.8
	2000			66.7	45.9	12.1	50.9	40.0	9.3			72.1	50.7	16.0	55.1	44.2	12.2
	2200			69.4	48.5	12.6	53.0	42.4	9.6			74.6	53.7	16.6	57.0	46.9	12.7
	1800	16.0	11.6	70.6	45.7	8.8	53.9	39.5	6.7	12.0	5.9	77.3	50.7	12.9	59.1	43.8	9.8
	2000			75.3	49.1	9.4	57.5	42.6	7.2			81.5	54.3	13.6	62.3	47.0	10.4
	2200			79.4	52.3	9.9	60.6	45.4	7.6			85.4	57.8	14.2	65.2	50.2	10.9
45	1800	6.0	1.8	44.7	35.9	14.9	34.1	31.8	11.4	6.0	1.6	52.7	41.2	17.6	40.3	36.3	13.4
	2000			45.0	37.9	15.0	37.1	37.8	12.4			53.1	43.6	17.7	40.5	38.5	13.5
	2200			45.5	39.9	15.2	39.2	39.2	13.1			53.9	46.0	18.0	48.3	48.3	16.1
	1800	11.0	5.7	58.4	41.0	10.6	44.6	35.8	8.1	9.0	3.4	63.8	45.4	14.2	48.8	39.6	10.8
	2000			61.2	43.8	11.1	46.7	38.4	8.5			66.2	48.4	14.7	50.5	42.4	11.2
	2200			63.7	46.4	11.6	48.6	40.7	8.8			68.5	51.4	15.2	52.3	45.1	11.6
	1800	16.0	11.6	64.8	43.4	8.1	49.5	37.7	6.2	12.0	5.9	71.0	48.2	11.8	54.2	41.8	9.0
	2000			69.1	46.7	8.6	52.7	40.7	6.6			74.8	51.7	12.5	57.1	45.0	9.5
	2200			72.9	49.8	9.1	55.6	43.5	7.0			78.3	55.1	13.1	59.8	48.0	10.0
50	1800	6.0	1.8	38.0	33.6	12.7	29.1	29.1	9.7	6.0	1.6	44.8	38.3	14.9	35.5	35.5	11.8
	2000			38.2	35.5	12.7	31.0	31.0	10.3			45.1	40.7	15.0	38.0	38.0	12.7
	2200			39.2	39.2	13.1	32.7	32.7	10.9			45.8	43.2	15.3	40.2	40.2	13.4
	1800	11.0	5.7	49.6	37.7	9.0	37.9	33.2	6.9	9.0	3.4	54.3	41.8	12.1	41.4	36.8	9.2
	2000			52.0	40.4	9.5	39.7	35.7	7.2			56.2	44.7	12.5	43.0	39.5	9.5
	2200			54.1	42.9	9.8	41.3	38.0	7.5			58.2	47.6	12.9	44.5	42.1	9.9
	1800	16.0	11.6	55.1	39.7	6.9	42.1	34.8	5.3	12.0	5.9	60.3	44.1	10.1	46.1	38.6	7.7
	2000			58.7	42.9	7.3	44.8	37.6	5.6			63.6	47.4	10.6	48.6	41.6	8.1
	2200			61.9	45.8	7.7	47.3	40.2	5.9			66.6	50.7	11.1	50.9	44.5	8.5

HOT WATER HEATING CAPACITIES

60SHW4 / 60SVW4 (4 ROW COIL)					
180°F ENTERING WATER TEMPERATURE					
CFM	GPM	WTR. P.D. FT.	TOTAL MBH	LVG. AIR °F	LVG. WTR °F
1800	6.0	1.8	128.0	136	137
2000			136.2	133	135
2200			143.8	131	132
1800	11.0	5.7	142.6	143	154
2000			152.9	141	152
2200			162.6	138	150
1800	16.0	11.6	149.6	147	161
2000			160.8	144	160
2200			171.4	142	159

*** 70 degree return air**

60HWK (2 ROW COIL)					
180°F ENTERING WATER TEMPERATURE					
CFM	GPM	WTR. P.D. FT.	TOTAL MBH	LVG. AIR °F	LVG. WTR °F
1800	6.0	3.1	93.1	118	149
2000			98.2	116	147
2200			103.1	113	145
1800	9.0	6.6	100.4	122	158
2000			106.5	119	156
2200			112.6	117	155
1800	12.0	11.5	104.4	124	163
2000			111.0	121	162
2200			117.7	120	160

*** 70 degree return air**

Notes:
1) See page 22 for hot water heating correction factors.
2) Optional 6 row coils should not be used for heating.
3) Optional 2 row hot water coils can be factory or field installed.
4) When these units are used for hot water heating the leaving air temperature must not exceed 150 degrees. At high altitude conditions, blower motor may cutout at a lower LAT. Contact factory for information.

90SHW / SVW

CHILLED WATER COOLING CAPACITIES

ENT. WTR. °F	C.F.M.	90SHW4 / 90SVW4 (4 ROW COIL)								90SHW6 / 90SVW6 (6 ROW COIL)							
		G.P.M.	WTR. P.D. FT.	80°F DB/67°F WB ENT. AIR			75°F DB/63°F WB ENT. AIR			G.P.M.	WTR. P.D. FT.	80°F DB/67°F WB ENT. AIR			75°F DB/63°F WB ENT. AIR		
				TOTAL MBH	SENS. MBH	TEMP. RISE	TOTAL MBH	SENS. MBH	TEMP. RISE			TOTAL MBH	SENS. MBH	TEMP. RISE	TOTAL MBH	SENS. MBH	TEMP. RISE
42	2500	10.0	2.2	80.4	60.2	16.1	61.4	52.8	12.3	11	1.6	94.2	66.6	17.1	71.9	58.0	13.1
	3000			85.2	67.6	17.0	65.0	59.6	13.0			100.3	74.9	18.2	76.6	65.6	13.9
	3500			89.4	74.7	17.9	76.5	76.5	15.3			106.6	83.3	19.4	81.4	73.3	14.8
	2500	15.0	4.7	96.3	66.3	12.8	73.5	57.6	9.8	21	5.5	120.7	77.2	11.5	92.2	66.3	8.8
	3000			104.5	74.8	13.9	79.8	65.3	10.6			133.4	87.8	12.7	101.9	75.8	9.7
	3500			111.2	82.7	14.8	84.9	72.5	11.3			144.9	98.0	13.8	110.1	84.8	10.5
	2500	22.0	9.8	108.1	71.0	9.8	82.6	61.3	7.5	31	11.5	133.3	82.4	8.6	101.8	70.3	6.6
	3000			119.3	80.6	10.8	91.1	69.8	8.3			149.6	94.4	9.6	114.2	80.9	7.4
	3500			128.8	89.4	11.7	98.3	77.8	8.9			164.1	105.7	10.6	125.3	90.9	8.1
45	2500	10.0	2.2	73.8	57.8	14.8	56.3	50.9	11.3	11	1.6	86.4	63.6	15.7	66.0	55.7	12.0
	3000			78.1	65.0	15.6	63.4	63.4	12.7			92.0	71.8	16.7	70.3	63.2	12.8
	3500			82.0	72.0	16.4	69.6	69.6	13.9			97.8	80.0	17.8	74.7	70.7	13.6
	2500	15.0	4.7	88.3	63.3	11.8	67.5	55.2	9.0	21	5.5	110.8	73.2	10.6	84.6	63.1	8.1
	3000			95.8	71.6	12.8	73.2	62.8	9.8			122.4	83.4	11.7	93.5	72.3	8.9
	3500			102.0	79.3	13.6	77.9	69.8	10.4			132.9	93.3	12.7	101.5	81.2	9.7
	2500	22.0	9.8	99.2	67.5	9.0	75.8	58.5	6.9	31	11.5	122.3	77.8	7.9	93.4	66.7	6.0
	3000			109.4	76.7	9.9	83.6	66.8	7.6			137.2	89.4	8.9	104.8	76.9	6.8
	3500			118.1	85.3	10.7	90.2	74.6	8.2			150.6	100.2	9.7	115.0	86.6	7.4
50	2500	10.0	2.2	62.7	53.7	12.5	47.2	47.2	9.4	11	1.6	73.5	58.8	13.4	56.1	51.8	10.2
	3000			66.4	60.8	13.3	52.8	52.8	10.6			78.2	66.7	14.2	62.5	62.5	11.4
	3500			69.6	69.6	13.9	58.0	58.0	11.6			83.1	74.7	15.1	68.5	68.5	12.5
	2500	15.0	4.7	75.1	58.3	10.0	57.4	51.3	7.6	21	5.5	94.2	66.6	9.0	71.9	58.0	6.8
	3000			81.5	66.2	10.9	62.2	58.5	8.3			104.1	76.3	9.9	79.5	66.7	7.6
	3500			86.7	73.7	11.6	63.3	63.3	8.4			113.0	85.7	10.8	86.3	75.2	8.2
	2500	22.0	9.8	84.3	61.7	7.7	64.4	54.0	5.9	31	11.5	103.9	70.4	6.7	79.4	61.0	5.1
	3000			93.0	70.5	8.5	71.0	61.9	6.5			116.6	81.2	7.5	89.1	70.6	5.7
	3500			100.4	78.7	9.1	76.7	69.3	7.0			128.0	91.4	8.3	97.7	79.7	6.3

HOT WATER HEATING CAPACITIES

90SHW4 / 90SVW4 (4 ROW COIL)					
180°F ENTERING WATER TEMPERATURE					
CFM	GPM	WTR. P.D. FT.	TOTAL MBH	LVG. AIR °F	LVG. WTR °F
2500	10.0	2.2	207.8	147	138
3000			232.4	142	133
3500			255.2	137	129
2500	15.0	4.7	222.4	152	150
3000			251.1	148	146
3500			278.5	144	143
2500	22.0	9.8	232.8	156	159
3000			265.1	152	156
3500			295.7	148	153

*** 70 degree return air**

90HWK (2 ROW COIL)					
180°F ENTERING WATER TEMPERATURE					
CFM	GPM	WTR. P.D. FT.	TOTAL MBH	LVG. AIR °F	LVG. WTR °F
2500	8.0	1.0	146.2	124	143
3000			160.5	120	140
3500			171.5	115	137
2500	14.0	2.8	162.3	130	157
3000			180.4	126	154
3500			196.2	122	153
2500	21.0	6.1	171.1	133	164
3000			191.2	129	162
3500			209.1	125	160

*** 70 degree return air**

Notes:
1) See page 22 for hot water heating correction factors.
2) Optional 6 row coils should not be used for heating.
3) Optional 2 row hot water coil can be factory installed in either the reheat (std.) or preheat positions.
4) When these units are used with hot water coil the leaving air temperature must not exceed 150 degrees. At high altitude conditions, blower motor may cutout at a lower LAT. Contact factory for information.

120SHW / SVW

CHILLED WATER COOLING CAPACITIES

ENT. WTR. °F	C.F.M.	120SHW4 / 120SVW4 (4 ROW COIL)								120SHW6 / 120SVW6 (6 ROW COIL)							
		G.P.M.	WTR. P.D. FT.	80°F DB/67°F WB ENT. AIR			75°F DB/63°F WB ENT. AIR			G.P.M.	WTR. P.D. FT.	80°F DB/67°F WB ENT. AIR			75°F DB/63°F WB ENT. AIR		
				TOTAL MBH	SENS. MBH	TEMP. RISE	TOTAL MBH	SENS. MBH	TEMP. RISE			TOTAL MBH	SENS. MBH	TEMP. RISE	TOTAL MBH	SENS. MBH	TEMP. RISE
42	3400	12.0	2.0	104.7	80.0	17.4	79.9	70.3	13.3	15	1.7	130.7	91.5	17.4	99.8	79.6	13.3
	4000			107.3	87.7	17.9	82.0	77.5	13.7			136.7	100.9	18.2	104.4	88.3	13.9
	4600			111.7	95.9	18.6	98.5	98.5	16.4			143.5	110.7	19.1	109.6	97.3	14.6
	3400	21.0	5.8	132.7	90.7	12.6	101.3	78.7	9.7	25	4.7	158.3	102.5	12.7	120.9	88.2	9.7
	4000			142.6	100.9	13.6	108.9	88.0	10.4			172.3	114.8	13.8	131.6	99.2	10.5
	4600			151.4	110.5	14.4	115.7	96.7	11.0			184.8	126.5	14.8	141.2	109.8	11.3
	3400	30.0	11.4	145.5	95.8	9.7	111.1	82.7	7.4	35	9.1	173.2	108.7	9.9	132.3	92.9	7.6
	4000			159.4	107.4	10.6	121.8	93.1	8.1			192.0	122.8	11.0	146.6	105.4	8.4
	4600			171.6	118.2	11.4	131.0	102.8	8.7			208.4	135.9	11.9	159.2	117.1	9.1
45	3400	12.0	2.0	96.0	76.8	16.0	73.3	67.8	12.2	15	1.7	119.9	87.4	16.0	91.6	76.4	12.2
	4000			98.5	84.5	16.4	82.5	82.5	13.8			125.4	96.7	16.7	95.8	85.0	12.8
	4600			102.5	92.6	17.1	89.5	89.5	14.9			131.6	106.3	17.5	100.5	93.8	13.4
	3400	21.0	5.8	121.7	86.5	11.6	93.0	75.4	8.9	25	4.7	145.2	97.3	11.6	110.9	84.1	8.9
	4000			130.9	96.4	12.5	100.0	84.4	9.5			158.1	109.2	12.6	120.7	94.8	9.7
	4600			138.9	105.8	13.2	106.1	93.0	10.1			169.6	120.6	13.6	129.5	105.1	10.4
	3400	30.0	11.4	133.5	91.0	8.9	102.0	79.0	6.8	35	9.1	158.9	102.8	9.1	121.3	88.4	6.9
	4000			146.3	102.3	9.8	111.7	89.1	7.4			176.1	116.3	10.1	134.5	100.4	7.7
	4600			157.4	112.8	10.5	120.2	98.5	8.0			191.2	129.0	10.9	146.0	111.7	8.3
50	3400	12.0	2.0	81.6	71.6	13.6	62.1	62.1	10.3	15	1.7	101.9	80.6	13.6	77.8	71.0	10.4
	4000			83.7	79.2	13.9	68.8	68.8	11.5			106.6	89.8	14.2	83.6	83.6	11.1
	4600			89.5	89.5	14.9	74.6	74.6	12.4			111.9	99.1	14.9	90.9	90.9	12.1
	3400	21.0	5.8	103.5	79.6	9.9	79.0	70.0	7.5	25	4.7	123.4	88.7	9.9	94.3	77.4	7.5
	4000			111.2	89.1	10.6	85.0	78.7	8.1			134.4	100.1	10.7	102.6	87.6	8.2
	4600			118.1	98.2	11.2	84.3	84.3	8.0			144.1	110.9	11.5	110.1	97.5	8.8
	3400	30.0	11.4	113.5	83.3	7.6	86.7	73.0	5.8	35	9.1	135.1	93.2	7.7	103.1	81.0	5.9
	4000			124.3	94.0	8.3	95.0	82.5	6.3			149.7	105.9	8.6	114.4	92.3	6.5
	4600			133.8	103.9	8.9	102.2	91.5	6.8			162.5	117.9	9.3	124.1	103.0	7.1

HOT WATER HEATING CAPACITIES

120SHW4 / 120SVW4 (4 ROW COIL)					
180°F ENTERING WATER TEMPERATURE					
CFM	GPM	WTR. P.D. FT.	TOTAL MBH	LVG. AIR °F	LVG. WTR °F
3400	12.0	2.0	273.2	144	135
4000			302.6	140	130
4600			328.3	136	125
3400	21.0	5.8	301.4	152	151
4000			337.0	148	148
4600			370.7	144	145
3400	30.0	11.4	314.4	155	159
4000			352.9	152	156
4600			389.8	148	154

*** 70 degree return air**

120HWK (2 ROW COIL)					
180°F ENTERING WATER TEMPERATURE					
CFM	GPM	WTR. P.D. FT.	TOTAL MBH	LVG. AIR °F	LVG. WTR °F
3400	11.0	1.0	198.5	124	144
4000			215.8	120	140
4600			229.4	116	138
3400	18.0	2.8	217.8	129	156
4000			239.8	125	153
4600			257.8	122	151
3400	25.0	5.3	227.8	132	162
4000			251.9	128	160
4600			272.0	125	158

*** 70 degree return air**

Notes:
1) See page 22 for hot water heating correction factors.
2) Optional 6 row coils should not be used for heating.
3) Optional 2 row hot water coil can be factory installed in either the reheat (std.) or preheat positions.
4) When these units are used with hot water coil the leaving air temperature must not exceed 150 degrees. At high altitude conditions, blower motor may cutout at a lower LAT. Contact factory for information.

180SHW / SVW

CHILLED WATER COOLING CAPACITIES

ENT. WTR. °F	C.F.M.	180SHW4 / 180SVW4 (4 ROW COIL)								180SHW6 / 180SVW6 (6 ROW COIL)							
		G.P.M.	WTR. P.D. FT.	80°F DB/67°F WB ENT. AIR			75°F DB/63°F WB ENT. AIR			G.P.M.	WTR. P.D. FT.	80°F DB/67°F WB ENT. AIR			75°F DB/63°F WB ENT. AIR		
				TOTAL MBH	SENS. MBH	TEMP. RISE	TOTAL MBH	SENS. MBH	TEMP. RISE			TOTAL MBH	SENS. MBH	TEMP. RISE	TOTAL MBH	SENS. MBH	TEMP. RISE
42	5200	18.0	2.0	155.0	120.4	17.2	118.4	105.9	13.2	20	1.7	184.0	133.8	18.4	140.5	116.9	14.1
	6000			157.4	130.2	17.5	134.8	134.8	15.0			188.1	145.0	18.8	143.6	127.4	14.4
	6800			164.0	141.4	18.2	145.0	145.0	16.1			197.4	158.2	19.7	150.8	139.5	15.1
	5200	30.0	5.3	194.3	135.3	13.0	148.4	117.7	9.9	30	3.6	218.3	147.2	14.6	166.8	127.4	11.1
	6000			205.7	148.2	13.7	157.1	129.5	10.5			230.7	161.3	15.4	176.2	140.3	11.7
	6800			216.6	160.7	14.4	165.4	140.9	11.0			244.4	175.8	16.3	186.6	153.5	12.4
	5200	42.0	10.1	214.9	143.3	10.2	164.1	124.0	7.8	40	6.3	240.6	156.2	12.0	183.8	134.4	9.2
	6000			231.9	158.2	11.0	177.1	137.4	8.4			259.1	172.5	13.0	197.9	149.0	9.9
	6800			246.5	172.1	11.7	188.3	149.9	9.0			276.5	188.4	13.8	211.2	163.3	10.6
45	5200	18.0	2.0	142.2	115.7	15.8	108.6	102.2	12.1	20	1.7	168.8	128.1	16.9	128.9	112.4	12.9
	6000			144.4	125.5	16.0	122.6	122.6	13.6			172.6	139.2	17.3	131.8	122.9	13.2
	6800			150.5	136.6	16.7	131.8	131.8	14.6			181.1	152.2	18.1	156.4	156.4	15.6
	5200	30.0	5.3	178.3	129.1	11.9	136.1	112.9	9.1	30	3.6	200.3	140.1	13.4	153.0	121.9	10.2
	6000			188.7	141.7	12.6	144.1	124.4	9.6			211.7	153.9	14.1	161.7	134.5	10.8
	6800			198.7	154.0	13.2	151.7	135.6	10.1			224.2	168.2	14.9	171.2	147.4	11.4
	5200	42.0	10.1	197.2	136.4	9.4	150.6	118.6	7.2	40	6.3	220.8	148.2	11.0	168.6	128.2	8.4
	6000			212.8	150.8	10.1	162.5	131.6	7.7			237.8	164.0	11.9	181.6	142.4	9.1
	6800			226.2	164.3	10.8	172.7	143.8	8.2			253.7	179.4	12.7	193.8	156.3	9.7
50	5200	18.0	2.0	120.8	108.0	13.4	93.4	93.4	10.4	20	1.7	143.5	118.7	14.3	110.8	110.8	11.1
	6000			122.6	122.6	13.6	102.1	102.1	11.3			146.7	129.8	14.7	121.4	121.4	12.1
	6800			131.8	131.8	14.6	109.8	109.8	12.2			153.9	142.5	15.4	130.4	130.4	13.0
	5200	30.0	5.3	151.5	119.1	10.1	115.7	104.9	7.7	30	3.6	170.3	128.6	11.4	130.0	112.8	8.7
	6000			160.4	131.3	10.7	122.5	116.1	8.2			179.9	142.0	12.0	137.4	125.0	9.2
	6800			168.9	143.2	11.3	122.8	122.8	8.2			190.6	155.7	12.7	145.5	137.5	9.7
	5200	42.0	10.1	167.6	125.1	8.0	128.0	109.7	6.1	40	6.3	187.7	135.2	9.4	143.3	118.0	7.2
	6000			180.8	138.8	8.6	138.1	122.1	6.6			202.1	150.3	10.1	154.3	131.6	7.7
	6800			192.2	151.7	9.2	146.8	133.8	7.0			215.6	165.0	10.8	164.7	144.9	8.2

HOT WATER HEATING CAPACITIES

180SHW4 / 180SVW4 (4 ROW COIL)					
180°F ENTERING WATER TEMPERATURE					
CFM	GPM	WTR. P.D. FT.	TOTAL MBH	LVG. AIR °F	LVG. WTR °F
5200	18.0	2.0	411.0	143	134
6000			449.4	139	130
6800			483.2	136	126
5200	30.0	5.3	450.7	150	150
6000			496.9	147	147
6800			540.5	143	144
5200	42.0	10.1	471.7	154	157
6000			521.8	150	155
6800			570.0	148	153

*** 70 degree return air**

180HWK (2 ROW COIL)					
180°F ENTERING WATER TEMPERATURE					
CFM	GPM	WTR. P.D. FT.	TOTAL MBH	LVG. AIR °F	LVG. WTR °F
5200	17.0	1.9	308.7	125	144
6000			332.3	121	141
6800			352.6	118	138
5200	25.0	4.1	332.3	129	153
6000			360.2	125	151
6800			386.1	123	149
5200	35.0	8.0	347.8	132	160
6000			378.5	128	158
6800			407.5	125	157

*** 70 degree return air**

Notes:
1) See page 22 for hot water heating correction factors.
2) Optional 6 row coils should not be used for heating.
3) Optional 2 row hot water coil can be factory installed in either the reheat (std.) or preheat positions.
4) When these units are used with hot water coil the leaving air temperature must not exceed 150 degrees. At high altitude conditions, blower motor may cutout at a lower LAT. Contact factory for information.

240SHW / SVW

CHILLED WATER COOLING CAPACITIES

ENT. WTR. °F	C.F.M.	240SHW4 / 240SVW4 (4 ROW COIL)								240SHW6 / 240SVW6 (6 ROW COIL)							
		G.P.M.	WTR. P.D. FT.	80°F DB/67°F WB ENT. AIR			75°F DB/63°F WB ENT. AIR			G.P.M.	WTR. P.D. FT.	80°F DB/67°F WB ENT. AIR			75°F DB/63°F WB ENT. AIR		
				TOTAL MBH	SENS. MBH	TEMP. RISE	TOTAL MBH	SENS. MBH	TEMP. RISE			TOTAL MBH	SENS. MBH	TEMP. RISE	TOTAL MBH	SENS. MBH	TEMP. RISE
42	6000	40.0	5.2	242.0	164.0	12.1	185.0	142.0	9.2	40	5.2	268.0	177.0	13.4	205.0	152.0	10.2
	8000			276.0	198.0	13.8	210.0	173.0	10.5			308.0	215.0	15.4	235.0	187.0	11.7
	10000			299.0	228.0	14.9	228.0	200.0	11.4			337.0	250.0	16.9	258.0	219.0	12.9
	6000	50.0	8.0	259.0	170.0	10.4	198.0	147.0	7.9	50	8.0	289.0	185.0	11.6	221.0	159.0	8.8
	8000			300.0	207.0	12.0	229.0	180.0	9.2			337.0	227.0	13.5	258.0	196.0	10.3
	10000			330.0	329.0	13.2	252.0	209.0	10.1			375.0	264.0	15.0	287.0	230.0	11.5
	6000	60.0	11.3	270.0	175.0	9.0	206.0	151.0	6.9	60	11.3	304.0	191.0	10.1	233.0	164.0	7.8
	8000			316.0	214.0	10.5	241.0	185.0	8.0			360.0	236.0	12.0	275.0	203.0	9.2
	10000			351.0	247.0	11.7	268.0	216.0	8.9			405.0	276.0	13.5	309.0	239.0	10.3
45	6000	40.0	5.2	222.0	156.0	11.1	170.0	136.0	8.5	40	5.2	246.0	168.0	12.3	188.0	145.0	9.4
	8000			253.0	189.0	12.6	193.0	166.0	9.7			282.0	205.0	14.1	216.0	179.0	10.8
	10000			274.0	219.0	13.7	209.0	193.0	10.5			309.0	239.0	15.5	236.0	210.0	11.8
	6000	50.0	8.0	238.0	162.0	9.5	181.0	141.0	7.3	50	8.0	265.0	175.0	10.6	202.0	151.0	8.1
	8000			275.0	198.0	11.0	210.0	173.0	8.4			309.0	216.0	12.4	236.0	188.0	9.5
	10000			302.0	229.0	12.1	231.0	201.0	9.2			344.0	252.0	13.8	263.0	221.0	10.5
	6000	60.0	11.3	248.0	166.0	8.3	189.0	144.0	6.3	60	11.3	279.0	181.0	9.3	213.0	156.0	7.1
	8000			290.0	203.0	9.7	221.0	177.0	7.4			330.0	224.0	11.0	252.0	194.0	8.4
	10000			322.0	237.0	10.7	246.0	207.0	8.2			371.0	263.0	12.4	283.0	229.0	9.4
50	6000	40.0	5.2	189.0	143.0	9.4	144.0	126.0	7.2	40	5.2	209.0	153.0	10.5	169.0	134.0	8.0
	8000			215.0	175.0	10.7	164.0	155.0	8.2			240.0	189.0	12.0	183.0	167.0	9.2
	10000			233.0	204.0	11.6	175.0	175.0	8.7			263.0	222.0	13.1	201.0	201.0	10.0
	6000	50.0	8.0	202.0	148.0	8.1	154.0	130.0	6.2	50	8.0	225.0	160.0	9.0	178.0	140.0	7.1
	8000			234.0	182.0	9.3	178.0	161.0	7.1			263.0	198.0	10.5	201.0	174.0	8.0
	10000			257.0	212.0	10.3	182.0	182.0	7.3			293.0	233.0	11.7	223.0	205.0	8.9
	6000	60.0	11.3	211.0	152.0	7.0	161.0	132.0	5.4	60	11.3	237.0	164.0	7.9	187.0	146.0	6.2
	8000			246.0	187.0	8.2	188.0	164.0	6.3			281.0	205.0	9.4	214.0	179.0	7.1
	10000			274.0	219.0	9.1	210.0	193.0	6.9			315.0	242.0	10.5	241.0	212.0	8.0

HOT WATER HEATING CAPACITIES

240SHW4 / 240SVW4 (4 ROW COIL)					
180°F ENTERING WATER TEMPERATURE					
CFM	GPM	WTR. P.D. FT.	TOTAL MBH	LVG. AIR °F	LVG. WTR °F
6000	40.0	5.2	547	154	153
8000			664	147	147
10000			768	141	142
6000	50.0	8.0	561	157	158
8000			687	150	153
10000			799	144	148
6000	60.0	11.3	571	158	161
8000			702	151	157
10000			819	146	153

*** 70 degree return air**

240HWK (2 ROW COIL)					
180°F ENTERING WATER TEMPERATURE					
CFM	GPM	WTR. P.D. FT.	TOTAL MBH	LVG. AIR °F	LVG. WTR °F
6000	15.0	0.9	323	120	137
8000			369	113	131
10000			415	108	125
6000	25.0	2.3	361	126	151
8000			420	119	146
10000			457	112	144
6000	35.0	4.3	382	192	158
8000			449	122	154
10000			494	116	152

*** 70 degree return air**

Notes:
1) See page 22 for hot water heating correction factors.
2) Optional 6 row coils should not be used for heating.
3) Optional 2 row hot water coil can be factory installed in either the reheat (std.) or preheat positions.
4) When these units are used with hot water coil the leaving air temperature must not exceed 150 degrees. At high altitude conditions, blower motor may cutout at a lower LAT. Contact factory for information.

HOT WATER HEATING CORRECTION FACTORS

ENTERING AIR TEMP. (°F)	ENTERING WATER TEMPERATURE (°F)								
	100	110	120	130	140	150	160	170	180
50	0.455	0.545	0.636	0.727	0.818	0.909	1.000	1.091	1.182
55	0.409	0.500	0.591	0.682	0.773	0.864	0.955	1.045	1.136
60	0.363	0.455	0.545	0.636	0.727	0.818	0.909	1.000	1.091
65	0.318	0.409	0.500	0.591	0.682	0.773	0.864	0.955	1.045
70	0.272	0.363	0.455	0.545	0.636	0.727	0.818	0.909	1.000
75	0.227	0.318	0.409	0.500	0.591	0.682	0.773	0.864	0.955
80	0.182	0.272	0.363	0.455	0.545	0.636	0.727	0.818	0.909

Notes:

1) To determine heating capacity at other than 180 deg. E.W.T. and 70 deg. E.A.T. multiply the selected heating capacity at 180 deg. times the appropriate correction factor from above chart.
2) These correction factors may be used on all First Co. published 180 deg. heating capacities.
3) When **SHW** units are used for hot water heating the leaving air temperature must not exceed 150 degrees. At high altitude conditions, blower motor may cutout at a lower LAT. Contact factory for information.

GUIDE SPECIFICATIONS

Furnish and install First Co. **SHW/SVW** Series Blower - Coil units as indicated on the plans.

CABINETS
Cabinets shall be manufactured of heavy gauge galvanized steel. The entire interior of the cabinet shall be insulated with one inch thick IAQ type insulation. Removable access panels shall be provided on both sides of the cabinet for maintenance and service. All cabinets shall have 2" supply and 1" return flanges.

INSULATION
The entire interior of the cabinet shall be insulated with one (1) inch insulation. This insulation must meet the requirements of ASTM C 1071, ASTM G 21, ASTM G 22, NFPA 90A, UL-181, and the cleaning practices of NAIMA.

MOTOR / BLOWERS
Blowers shall be resiliently mounted, with ball bearings, forward curved blade, and of centrifugal type. Each wheel shall be dynamically balanced for smooth, quiet operation. Blowers shall be belt driven with field adjustable pulleys to permit variations in static pressure and air requirements. Standard motors are 1725 RPM either single or three phase. All motors to be field or factory installed and wired at voltage specified by customer.

COILS
All **SHW/SVW** series coils shall consist of aluminum fins mechanically bonded onto 3/8" or 1/2" OD seamless copper tubing. All coils shall be leak tested at 350 PSIG minimum air pressure. Manual air vents shall be standard on all coils.
Drain pans shall be coated for corrosion protection.

FILTERS
One inch throw away filters are standard in 2-5 ton **SHW/SVW** units.
One inch permanent filters are provided as standard in 7-20 ton **SHW/SVW** units. Filters shall be accessible without tools.

LISTING
All standard motors are ETL Listed. All air handlers shall be rated in accordance with ARI Standard 430. Standard motors have internal overload protection. Therefore, units shipped with standard motors will be ETL listed. Most non-standard motors (i.e. 575V, 2-speed, TEFC, some 50 Hz., etc.) are <u>not</u> available with internal overload protection. Therefore, most units shipped with non-standard motors can be ETL listed with the addition of a factory installed motor starter (contact the factory for starter information and ETL verification.)

Catalog No. SHW-SVW510 (Replaces SHW-SVW410)